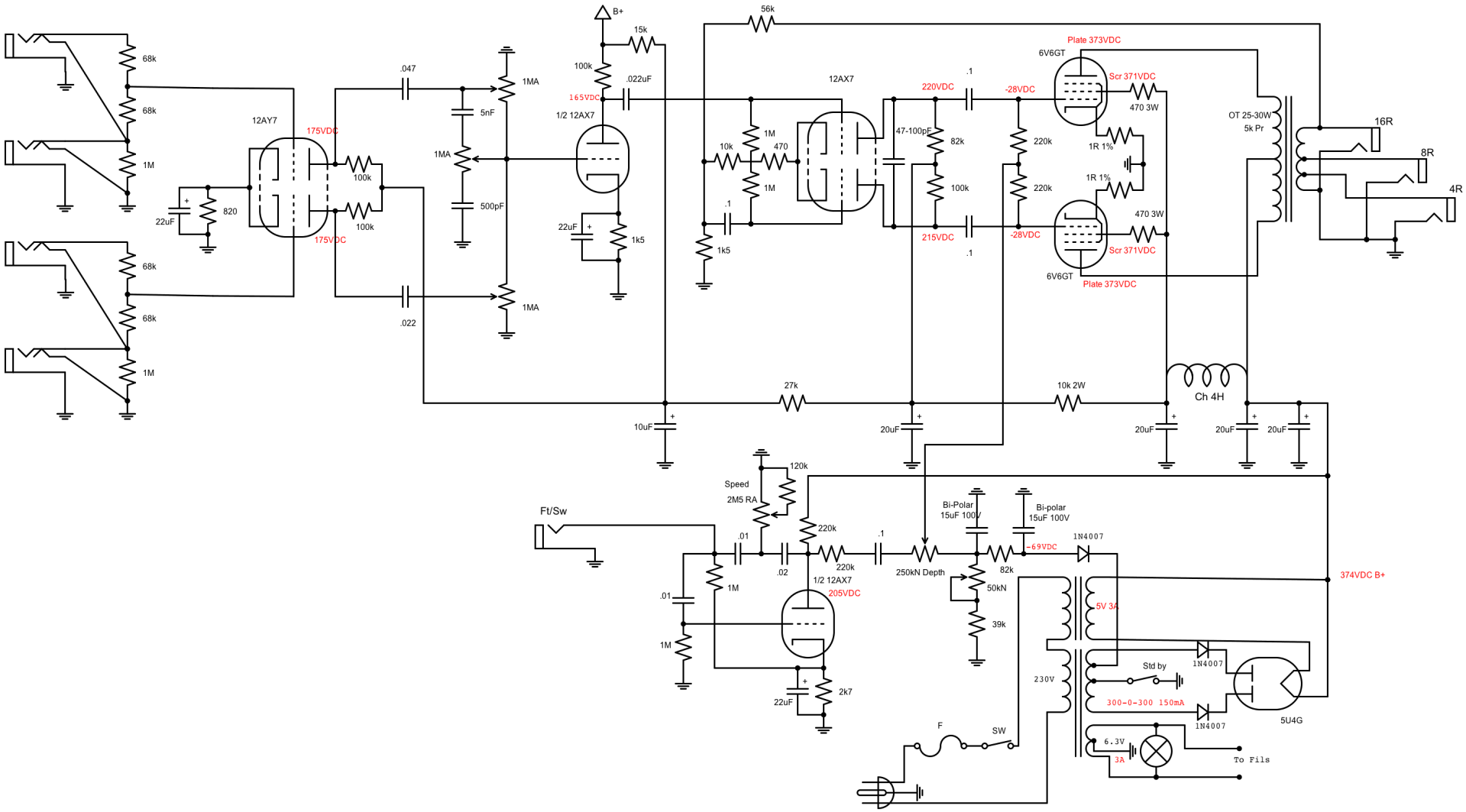

Tubeswell DeTremoluxe		
Bias 6V6GTs to 22-29mA		
	Rev 4.1b 11/28/08	Page #