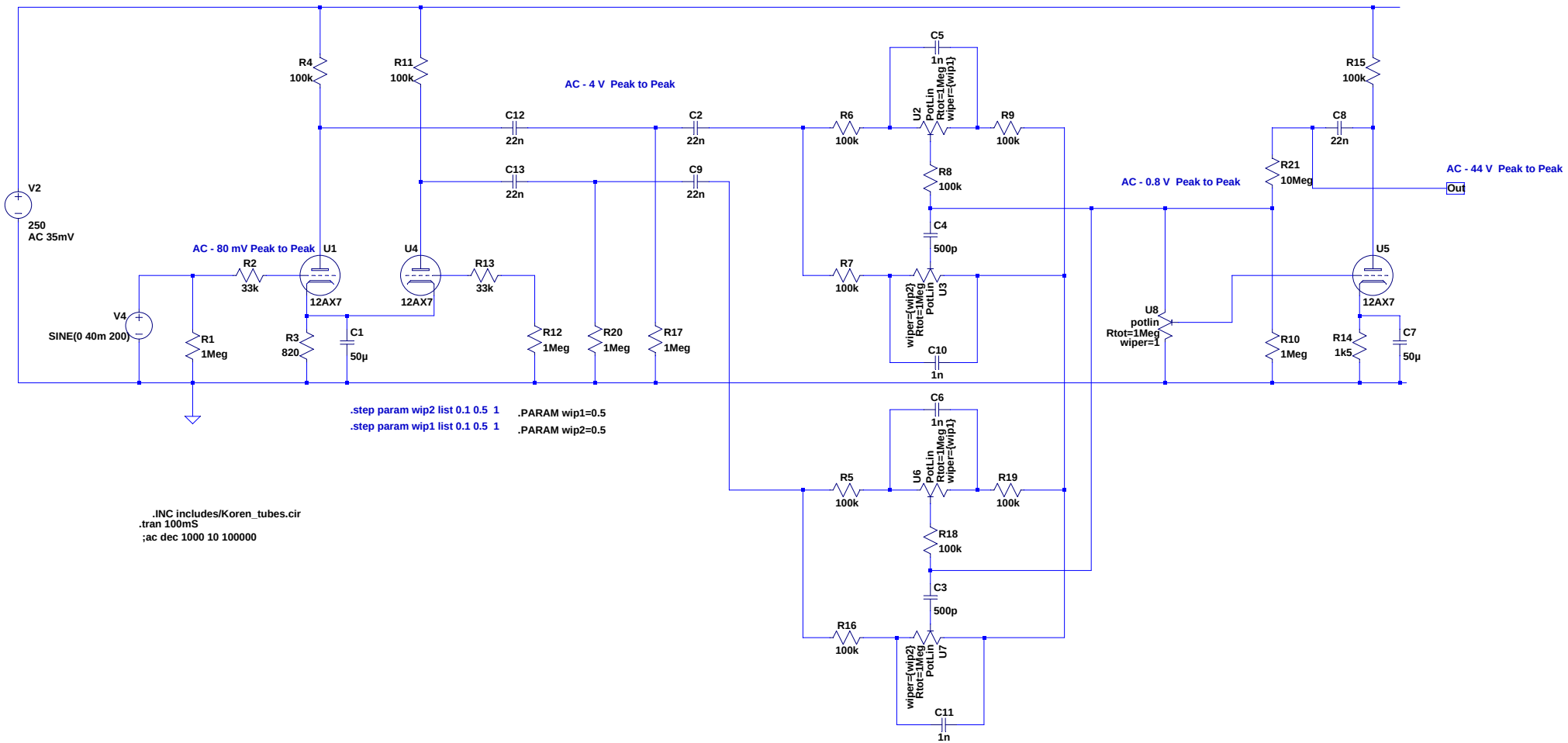

--- C:\Program Files\LTC\SwCADIII\Draft16a.asc ---