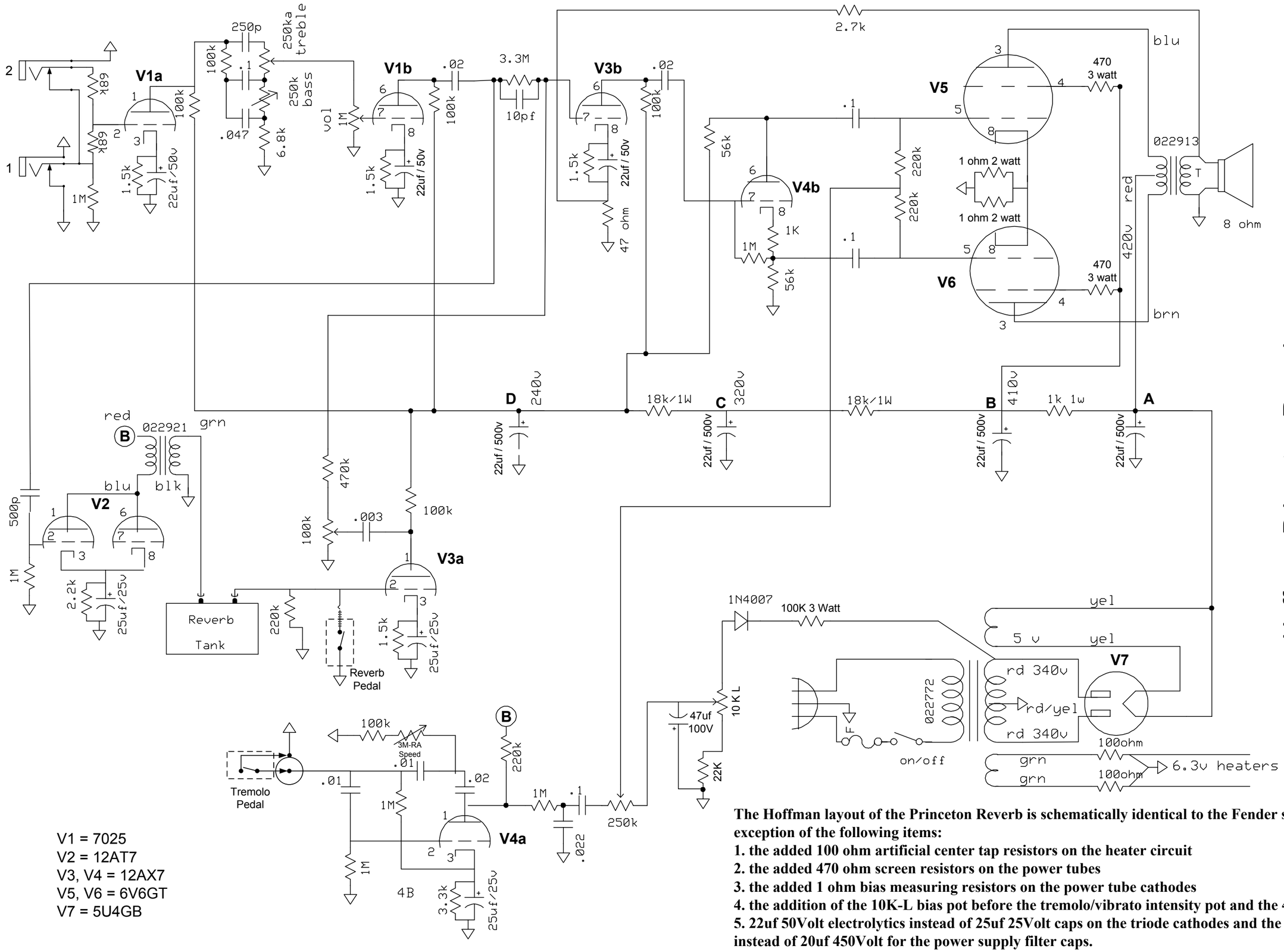

Hoffman Princeton Reverb AA1164 Schematic

V1 = 7025
V2 = 12AT7
V3, V4 = 12AX7
V5, V6 = 6V6GT
V7 = 5U4GB

The Hoffman layout of the Princeton Reverb is schematically identical to the Fender schematic with the exception of the following items:

1. the added 100 ohm artificial center tap resistors on the heater circuit
2. the added 470 ohm screen resistors on the power tubes
3. the added 1 ohm bias measuring resistors on the power tube cathodes
4. the addition of the 10K-L bias pot before the tremolo/vibrato intensity pot and the 47uf bias cap value
5. 22uf 50Volt electrolytics instead of 25uf 25Volt caps on the triode cathodes and the 22uf 500Volt caps instead of 20uf 450Volt for the power supply filter caps.