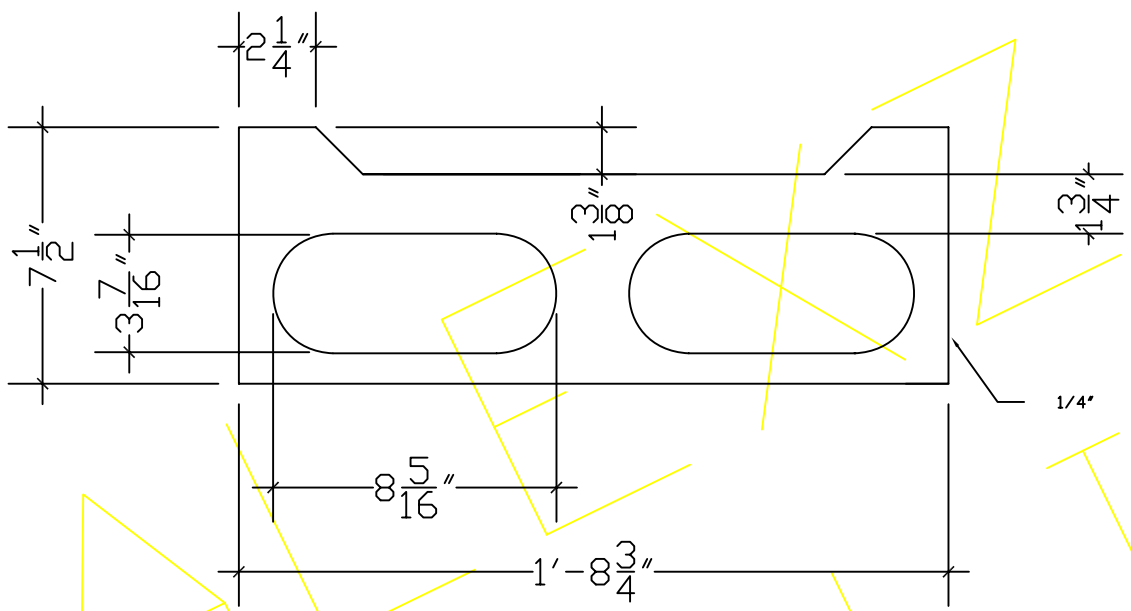

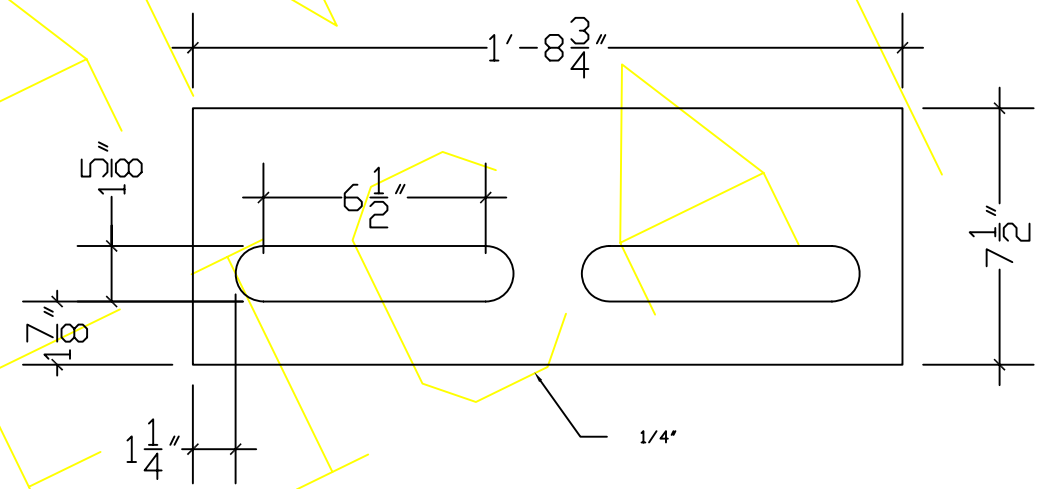

ALEXANDER AMPLIFICATION

Notes

No	Modifications

Alexzander Amplification - since 1980

Draw by: A.L.	Scale : No scale
Check by: R.P.	
Approved by: R.P.	

General

Bandmaster

Fender',"Marshall","VOX","HIVATT", "Sound City" and all the amp brand names above are trademarked by the those companies. Alexzander Amplification -Since 1980- respects those trademarks and is in no way associated with any amp company.
? Copyright Alexzander Amplification -Since 1980- 1999-2007. All rights reserved.