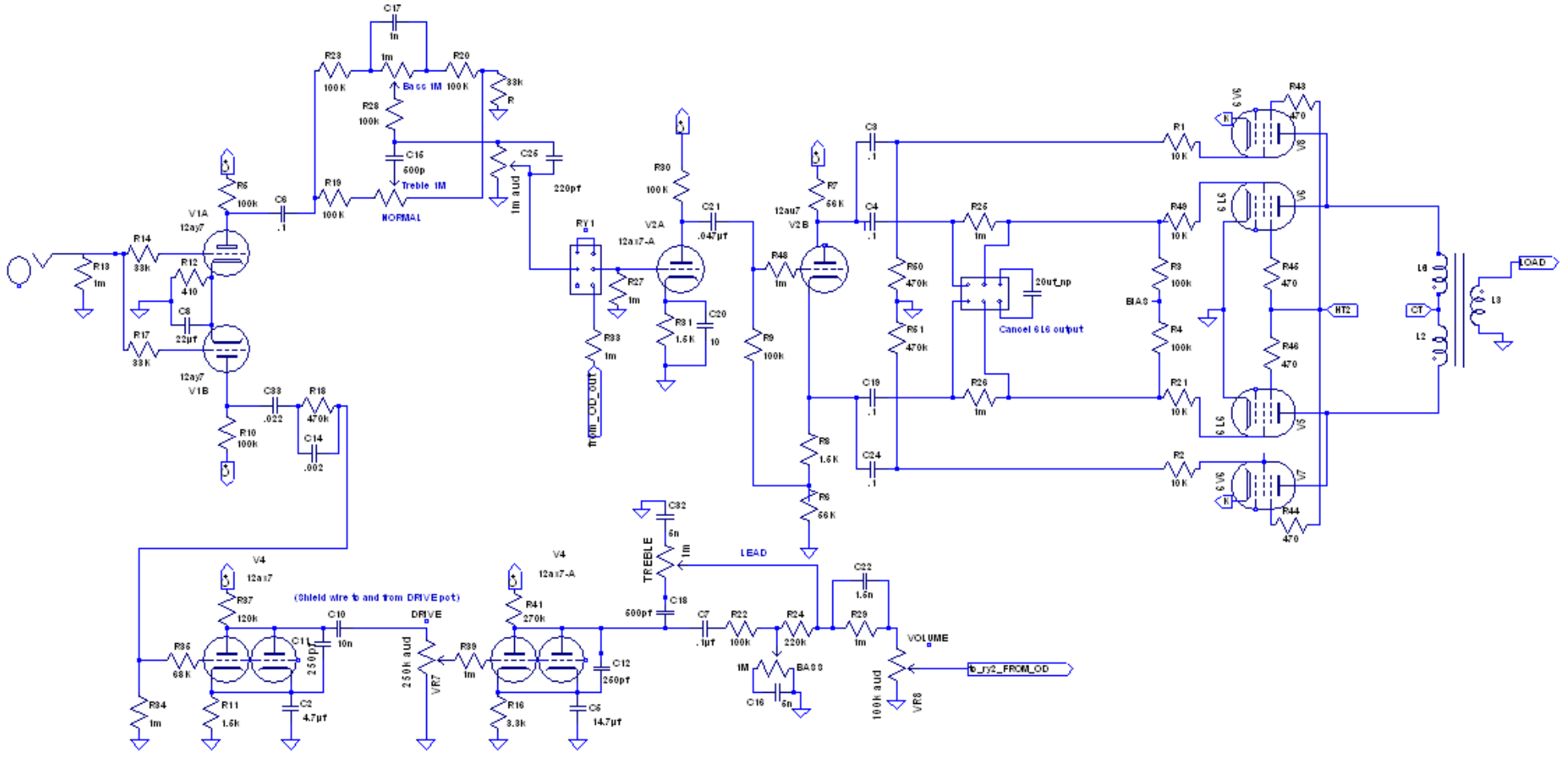
C17
1n
R23
100k
R20
100k
Bass 1M
33k
R
R28
100k
C16
600p
Treble 1M
NORMAL
R19
100k
C26
220pf
1m aud
R5
100k
C6
.1
V1A
12ay7
R14
33k
R13
1m
R12
410
C8
22µf
R17
33k
12ay7
V1B
C33
.022
R18
470k
C14
.002
R10
100k
RY1
R27
1m
R33
1m
from_OD_out
R30
100k
C21
.047µf
V2A
12ax7-A
R31
1.5k
C20
10
R48
1m
R9
100k
R7
56k
12au7
V2B
C3
.1
C4
.1
R50
470k
R51
470k
R25
1m
20ut_np
Cancel 6L6 output
R26
1m
C19
.1
C24
.1
R8
1.5k
R6
56k
R1
10k
R49
10k
R3
100k
BIAS
R4
100k
R21
10k
R2
10k
V6
6L6
V7
6L6
V8
6V6
V9
6V6
R43
470
R45
470
R46
470
R44
470
HT2
L6
CT
L2
L3
LOAD
C32
5n
TREBLE
1m
LEAD
C18
500pf
C7
.1µf
R22
100k
R24
220k
C22
1.5n
R29
1m
VOLUME
1M
BASS
C16
5n
100k aud
VR8
to_ry2_FROM_OD
V4
12ax7
R37
120k
(Shield wire to and from DRIVE pot)
C10
10n
DRIVE
250k aud
VR7
R39
1m
R35
68k
C11
250p
R34
1m
R11
1.5k
C2
4.7µf
V4
12ax7-A
R41
270k
C12
250pf
R16
3.3k
C5
14.7µf