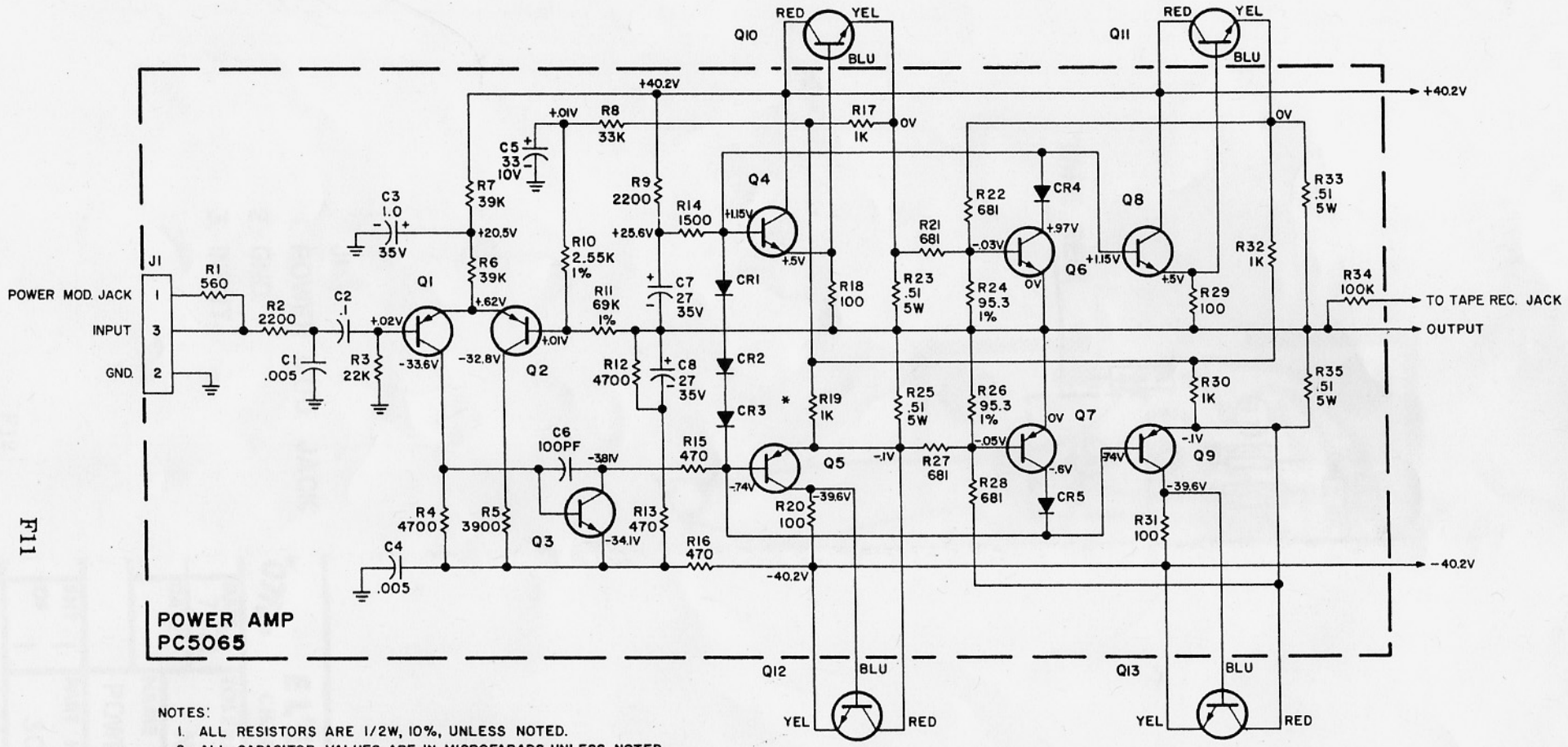

NOTES:

1. ALL RESISTORS ARE 1/2W, 10%, UNLESS NOTED.
2. ALL CAPACITOR VALUES ARE IN MICROFARADS, UNLESS NOTED.
*3. DIODE CR3 IS MOUNTED IN A CLIP ON THE CHASSIS.
4. TRANSISTORS Q10, Q11, Q12, & Q13 ARE MOUNTED IN A BRACKET ON THE CHASSIS.
5. VOLTAGE MEASUREMENTS ARE WITH POWER ON, NO SIGNAL, NO LOAD AND MEASURED FROM COMMON GROUND.

SYMBOL	KUSTOM PART NO.
CR1 & CR2	007-6011-00
CR3	007-6006-00
CR4 & CR5	007-6016-00
Q1 & Q2	007-0009-00
Q3	007-0002-00
Q4 & Q8	007-0011-00
Q5 & Q9	007-0012-00
Q6	007-0005-00
Q7	007-0006-00
J1	030-2034-00
Q10 THRU Q13	007-0000-00

REV	C.O. NO	DATE	BY
1	473	6-71	JTS
2	488	7-71	JTS
3	537	8-71	JTS
4	581	10-71	JS

REQ	PART NUMBER	DESCRIPTION	ITEM

Kustom ELECTRONICS, INC.
CHANUTE, KAN. 66720

DRN SPAITS	DATE 5-71	TOLERANCES NONE	MATERIAL NONE
CHK	DATE	NAME SCHEMATIC DIAGRAM— POWER AMP PC5065	
ENGR			
SCALE NONE	SHT 1 OF 1	PART NUMBER 002-5065-00	