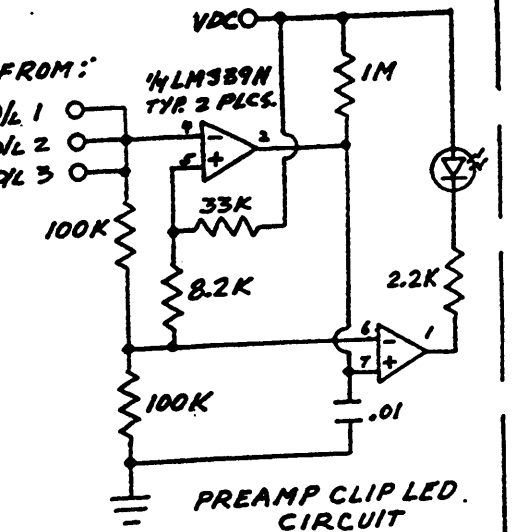

PREAMP CLIP LED CIRCUIT

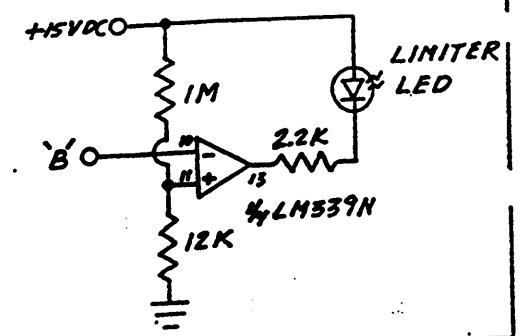

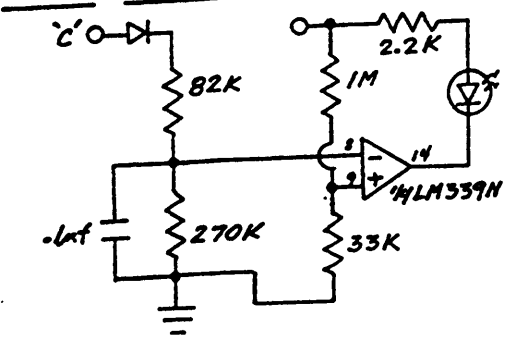

POWER AMP CLIP LED CIRCUIT
NOTE: NOT ON SM-400 OR G.T.P.

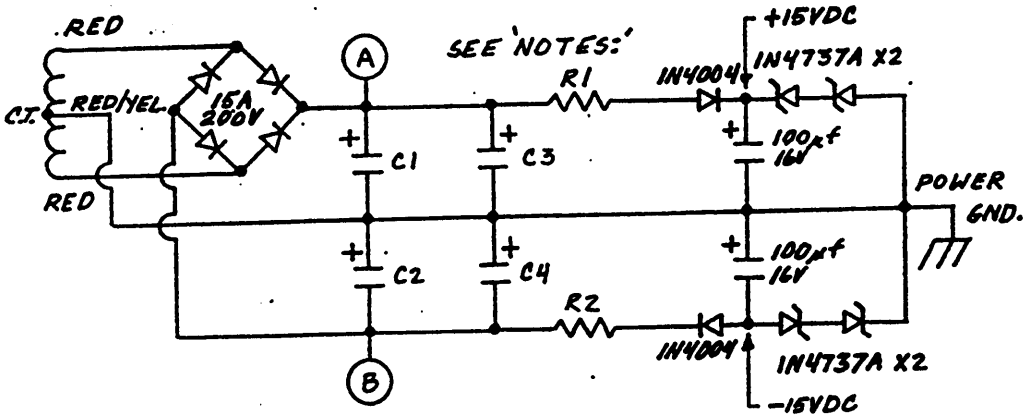

POWER SUPPLY CIRCUIT

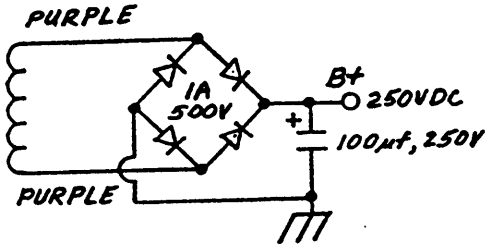

TRANSFORMER SECONDARY WIRING REF.:
STUDIO 220 PCB#170001
SM-400 PCB#170003, 170004
BABY/ELECTRIC BLUE PCB#170008
STEREO 800/SM-900 #170011
BASSIC BLACK PCB#170013

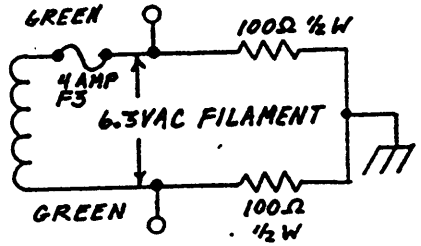

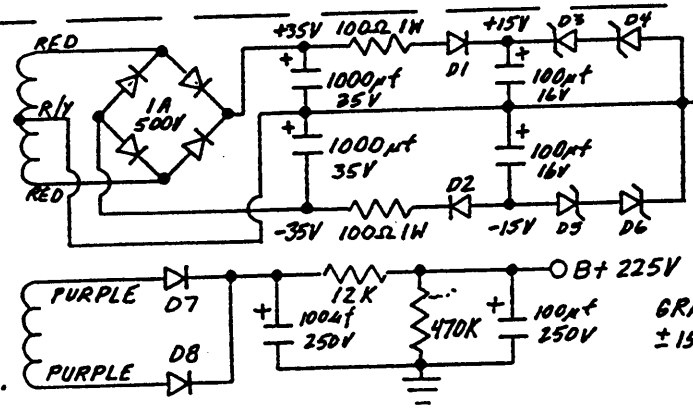

D1-D2, D7-D8 = 1N4004
D3-D6 = 1N4737A

GRAND PRIX PREAMP ONLY
±15V SUPPLY + B+ SUPPLY

NOTES:
1. POINT 'A' = +DCV, POINT 'B' = -DCV
- G.T. PREAMP = ±35V
- STUDIO 220, SM-400, REDHEAD, BABY/ELECTRIC BLUE = ±60V
- STEREO 800, SM-900 = ±75V
2. C1 THRU C4 VALUES
- G.T. PREAMP C1,C2 = 1000µf, 35V
- STUDIO 220, BABY/ELECTRIC BLUE C1,C2 = 4700µf, 63V C3,C4 = N/A
- SM-400, REDHEAD C1-C4 = 4700µf, 63V
- STEREO 800, SM-900 C1-C4 = 6800µf, 80V
- BASSIC BLACK C1,C2 = 4700µf 63V
3. R1 AND R2 VALUES
- GT PREAMP = 100Ω, 1W
- STUDIO 220, SM-400 = 660Ω, 3W
- REDHEAD, BABY/ELECTRIC BLUE, BASSIC BLACK = 820Ω, 3W
- STEREO 800 = 1.1K, 5W
- SM-900 = 550Ω, 10W

SWR ENGINEERING, INC.
12823 Foothill Blvd. Unit F
SYLMAR, CALIFORNIA 91342

SCHEMATIC
- SECONDARY WIRING
- PREAMP/POWER CLIP CIRC.
- ALL MODELS

REV. C NO. 1002
DRAWN: S.W. RABE FEB. 6, 1991