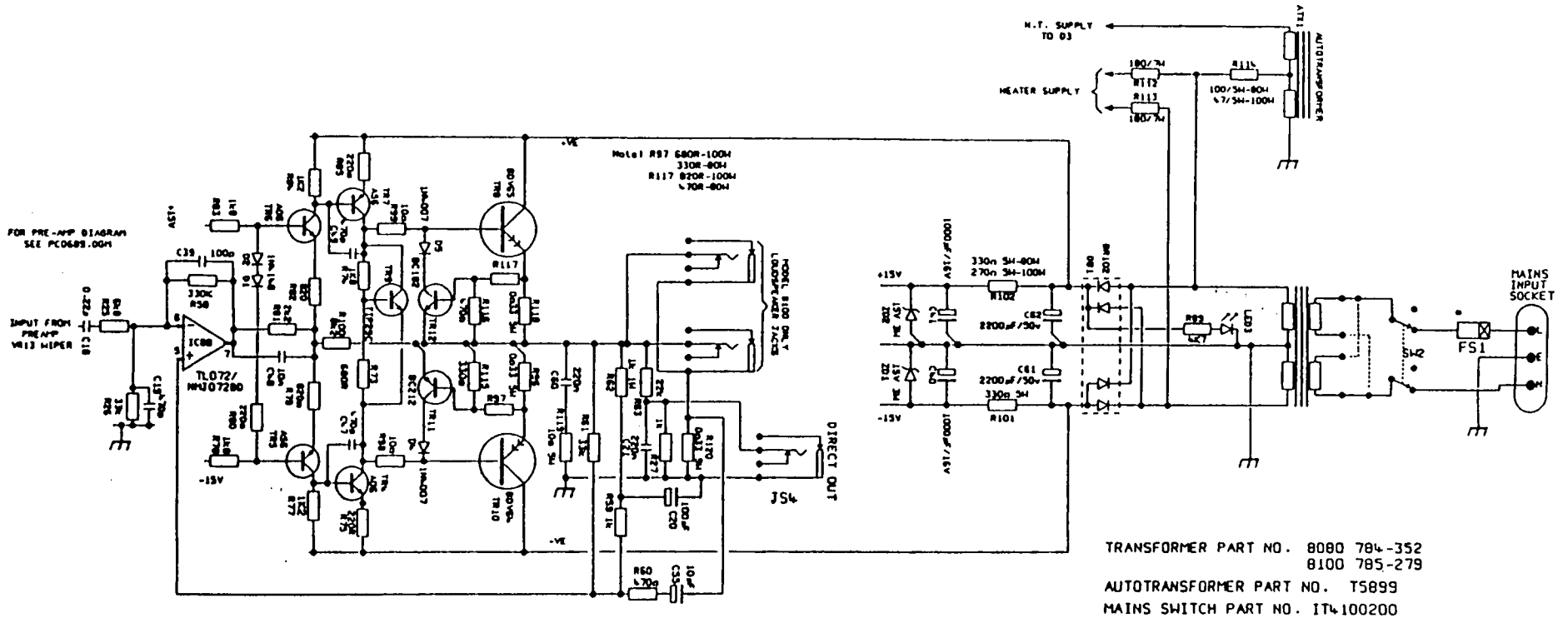

8080 PA

1451	07/03/94	UNSPECIFIED HOLE DATA	MATERIAL	DIMENSIONS IN	TITLE