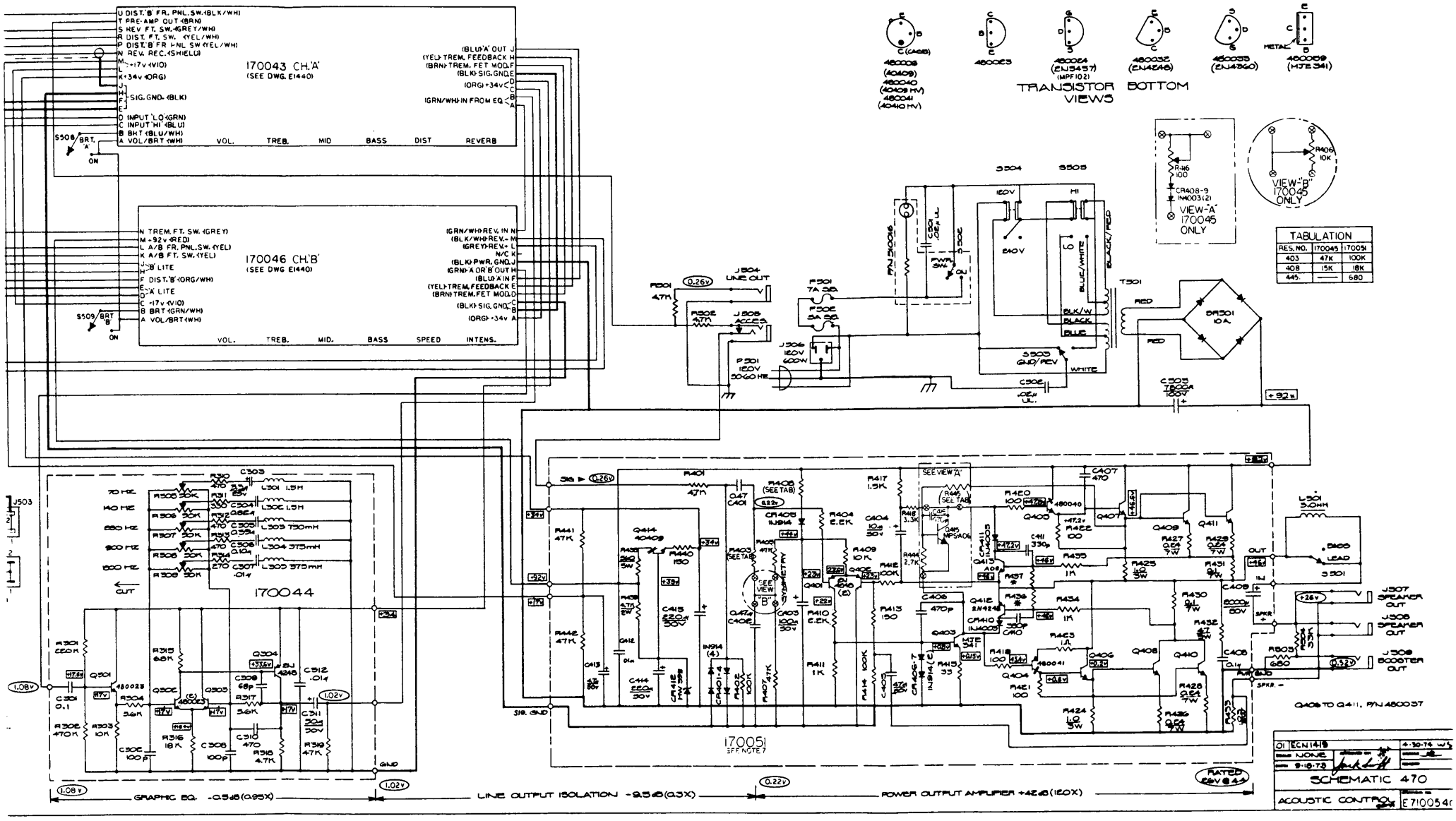
170043 CH.'A'
(SEE DWG. E1440)
170046 CH.'B'
(SEE DWG E1440)
170044
170051
TRANSISTOR BOTTOM VIEWS
VIEW-'A' 170045 ONLY
VIEW-'B' 170045 ONLY
TABULATION
RES. NO. 170045 170051
403 47K 100K
408 15K 18K
445 — 680
SCHEMATIC 470
ACOUSTIC CONTROL
E710054
GRAPHIC EQ. -0.5dB (0.95X)
LINE OUTPUT ISOLATION -9.5dB (0.3X)
POWER OUTPUT AMPLIFIER +42dB (150X)
J507 SPEAKER OUT
J508 SPEAKER OUT
J509 BOOSTER OUT
Q408 TO Q411, P/N 480037