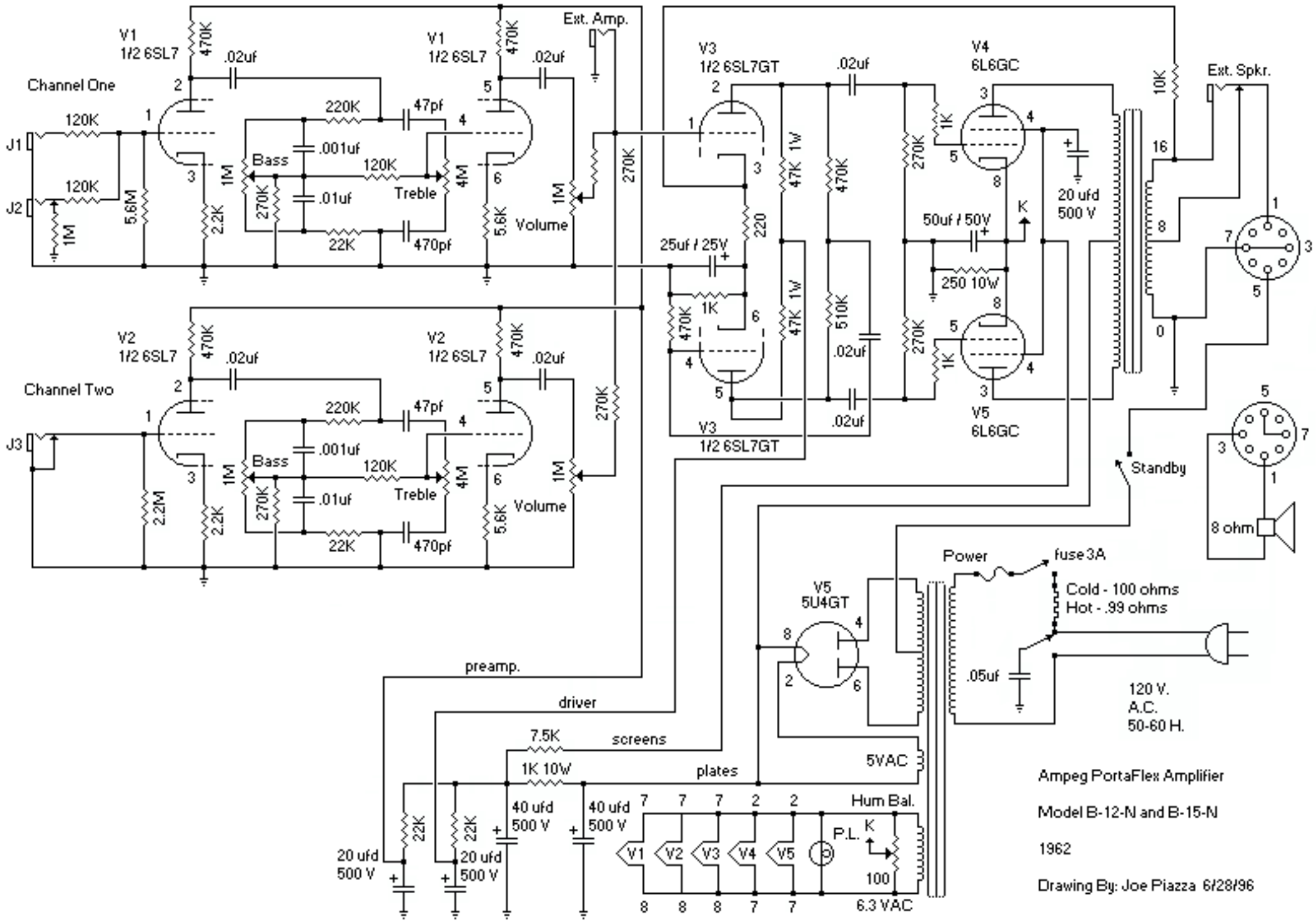
Channel One
Channel Two
V1
1/2 6SL7
V2
1/2 6SL7
V3
1/2 6SL7GT
V4
6L6GC
V5
6L6GC
V5
5U4GT
Ext. Amp.
Ext. Spkr.
J1
J2
J3
120K
470K
.02uf
220K
47pf
.001uf
.01uf
Bass
Treble
Volume
22K
470pf
1M
4M
270K
5.6M
2.2K
2.2M
5.6K
25uf / 25V
1K
220
47K 1W
510K
10K
20 ufd
500 V
50uf / 50V
250 10W
K
Standby
8 ohm
Power
fuse 3A
Cold - 100 ohms
Hot - .99 ohms
.05uf
120 V.
A.C.
50-60 H.
preamp.
driver
screens
plates
7.5K
1K 10W
40 ufd
500 V
22K
20 ufd
500 V
5VAC
Hum Bal.
P.L.
100
6.3 VAC
Ampeg PortaFlex Amplifier
Model B-12-N and B-15-N
1962
Drawing By: Joe Piazza 6/28/96