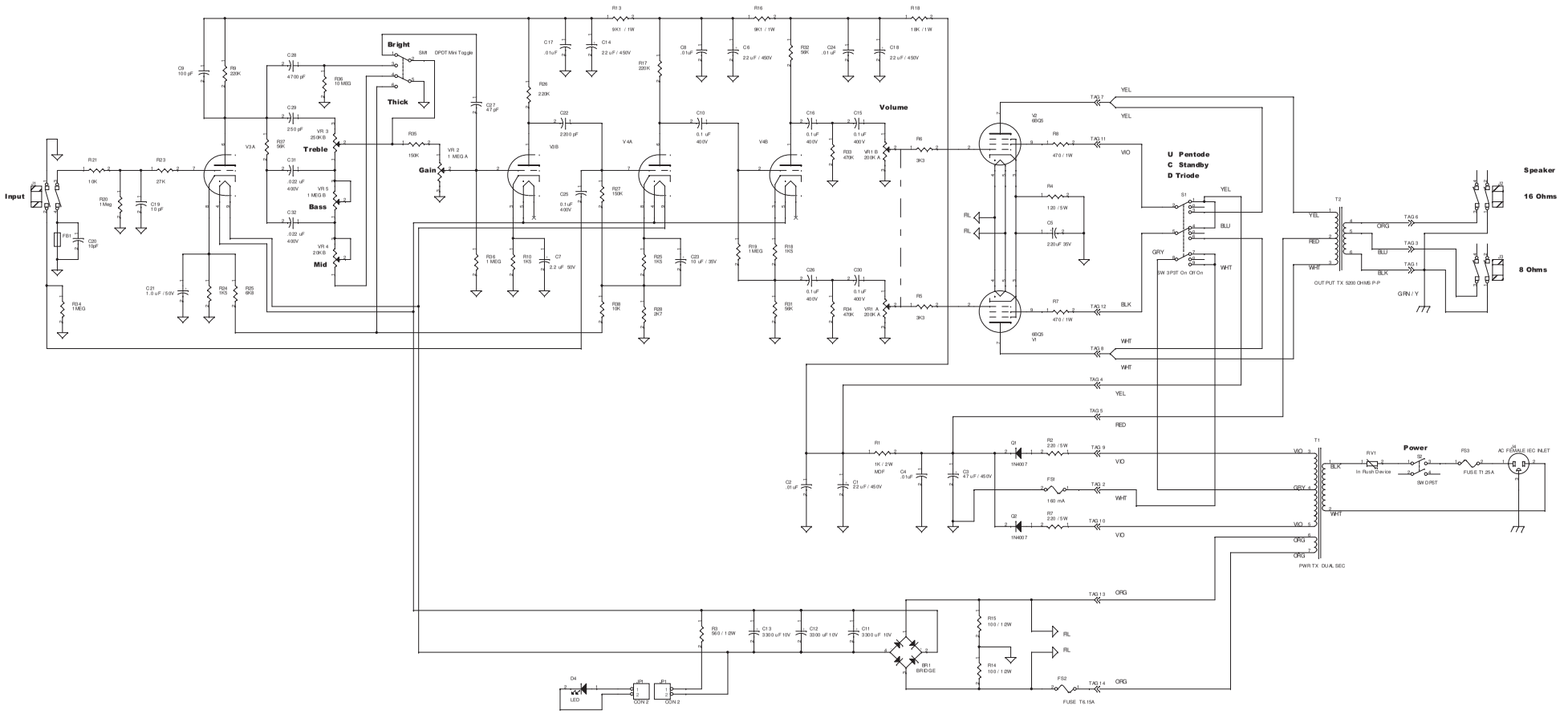


| | | | |
|---|---|---|---|
| File | VOX Night Train NT-15 | | |
| Size D | Document Number PCB_NT15H_1001_ISS2 | | Rev A |
| Date: Tuesday, July 21, 2009 | | Sheet 1 of 1 | |