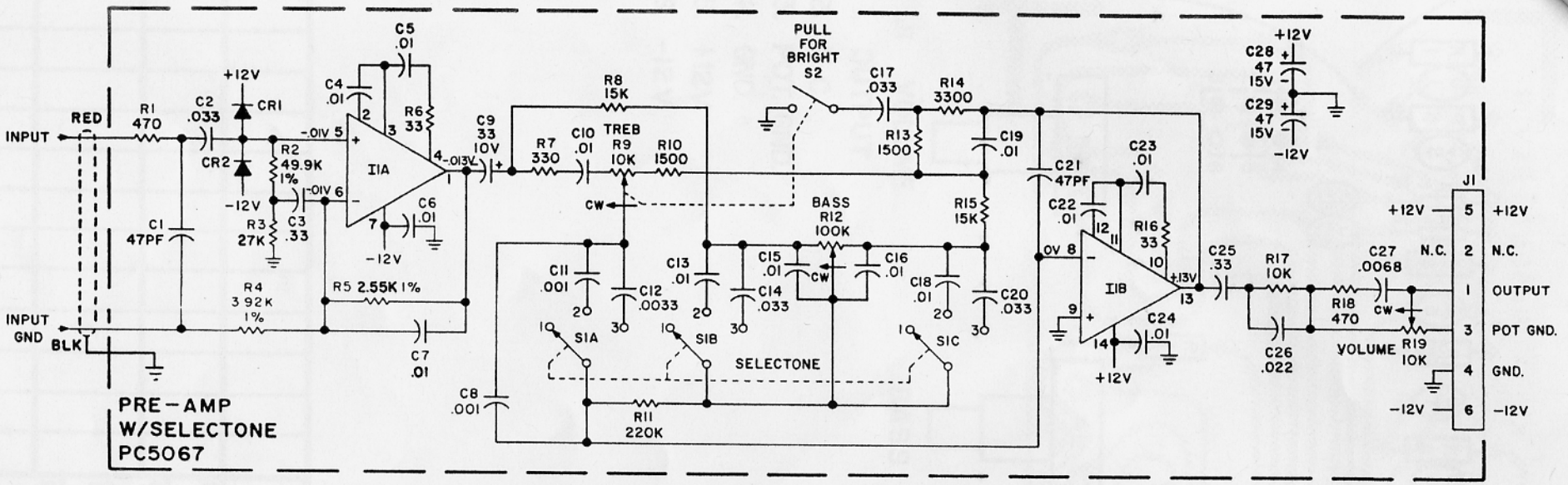

SYMBOL	KUSTOM PART NO.
CR1 & CR2	007-6016-00
R9 & S2	133-0036-00
R12	133-0021-00
R19	133-0022-00
S1	031-0033-00
J1	030-2035-00

NOTES

1. ALL RESISTORS ARE 1/2 W, 10%, UNLESS NOTED.
2. ALL CAPACITOR VALUES ARE IN MICROFARADS, UNLESS NOTED.
3. VOLTAGE MEASUREMENTS ARE WITH POWER ON, ALL CONTROLS FULL ON, NO SIGNAL, NO LOAD AND MEASURED FROM COMMON GROUND.

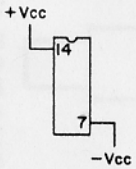

14 PIN I.C.
BOTTOM VIEW
KPN 007-7015-00

REV	C.O. NO	DATE	BY
1	653	12-71	JTS
2	705	3-72	LB

REQ	PART NUMBER	DESCRIPTION	ITEM

Kustom ELECTRONICS, INC. CHANUTE, KAN. 66720

DRN SPAITS	DATE 5-71	TOLERANCES NONE	MATERIAL NONE
CHK	DATE	NAME SCHEMATIC DIAGRAM- PRE-AMP W/SELECTONE	
ENGR			
SCALE NONE	SHT 1 OF 1	PART NUMBER 002-5067-00	