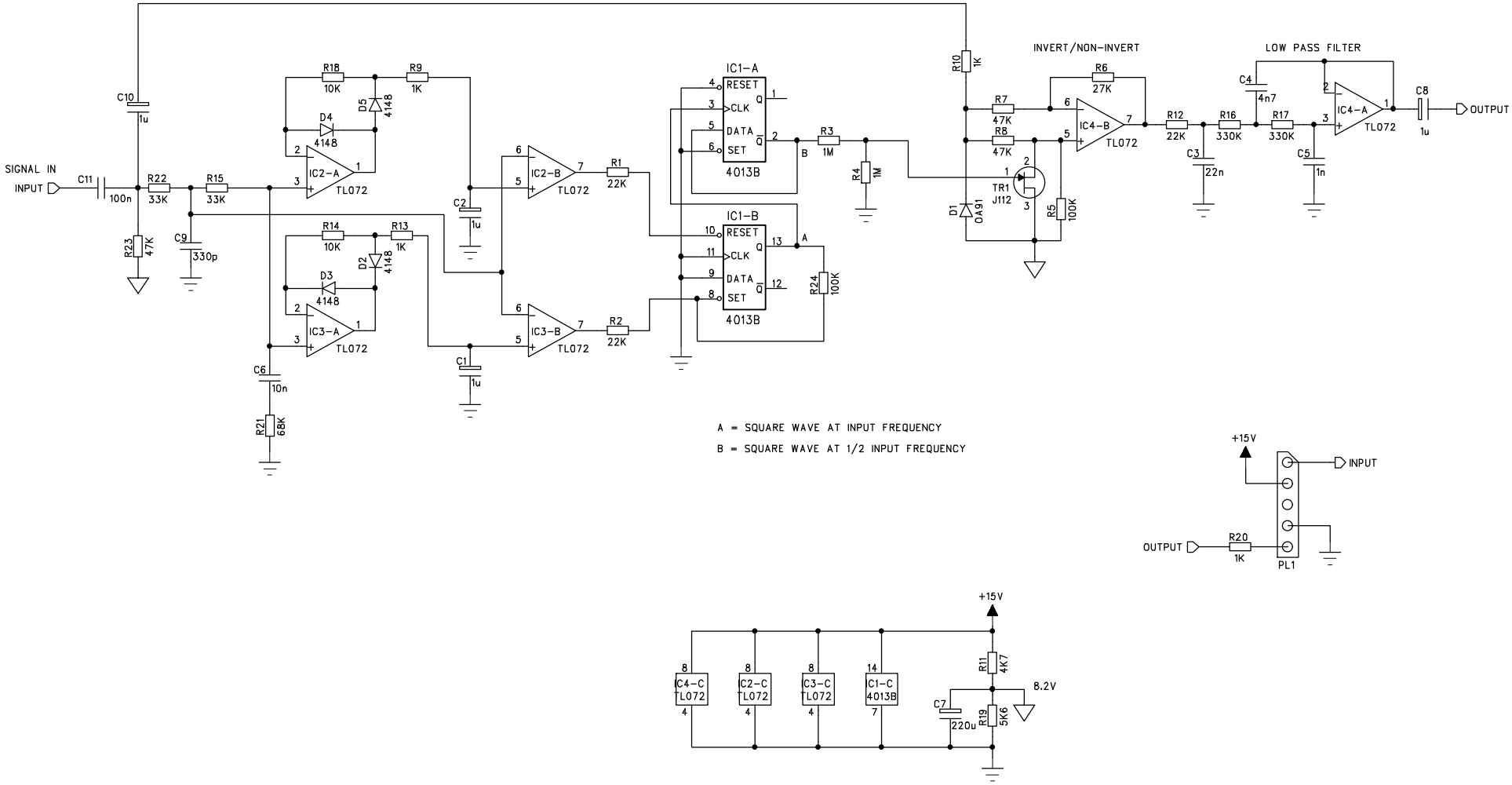

TITLE	SUB OCTAVE GENERATOR
PROJECT	ABM, MAG, EB
DRAWING No	ACD044
ISSUE	1
DATE	02/02/04
DRAWN BY	CLIVE BUTTON

ASHDOWN
PARK FARM, INWORTH
COLCHESTER, CO5 9SH
ENGLAND
TEL (01376) 572872
FAX (01376) 572972