ypical Applications

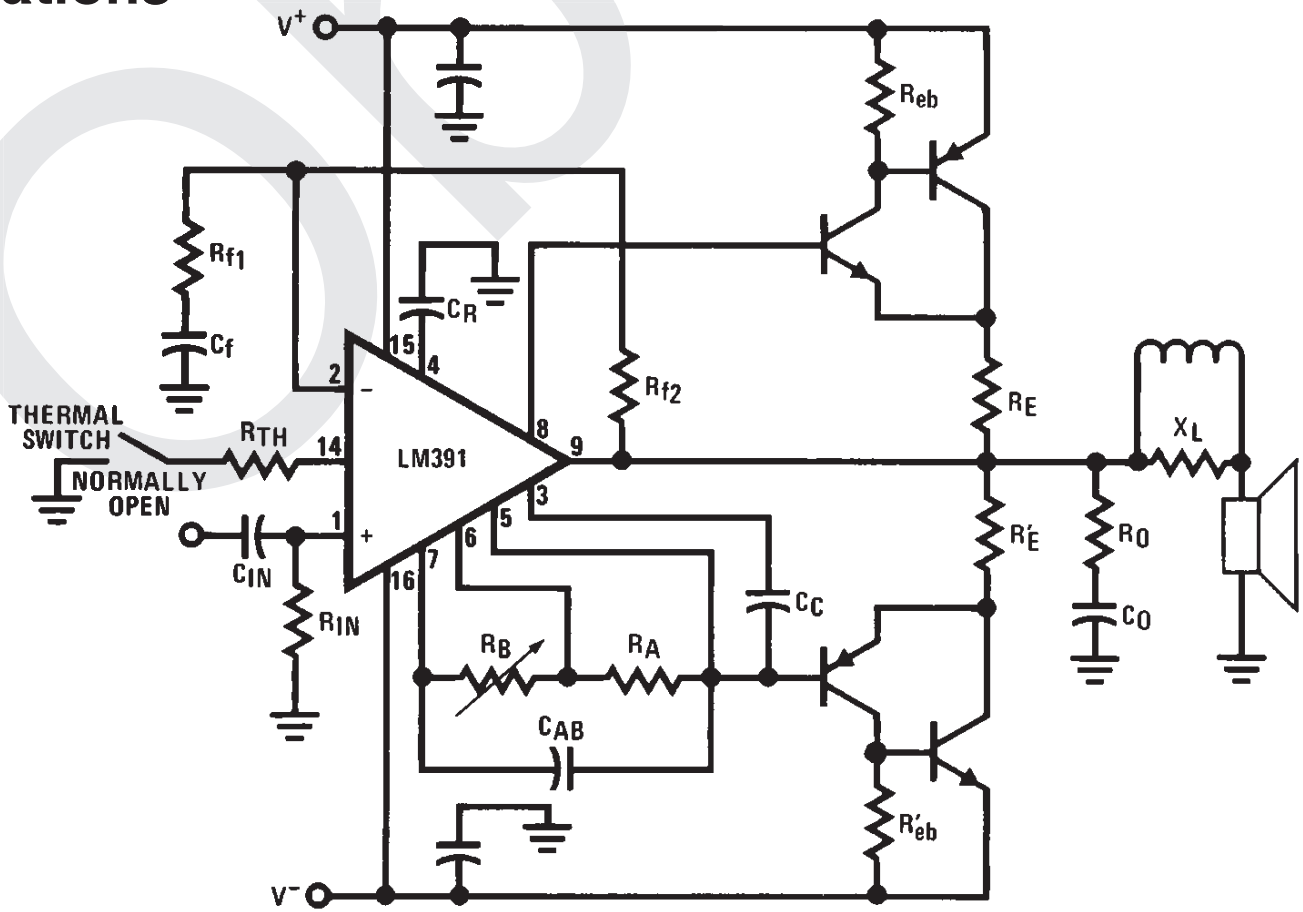

TL/H/7146–3