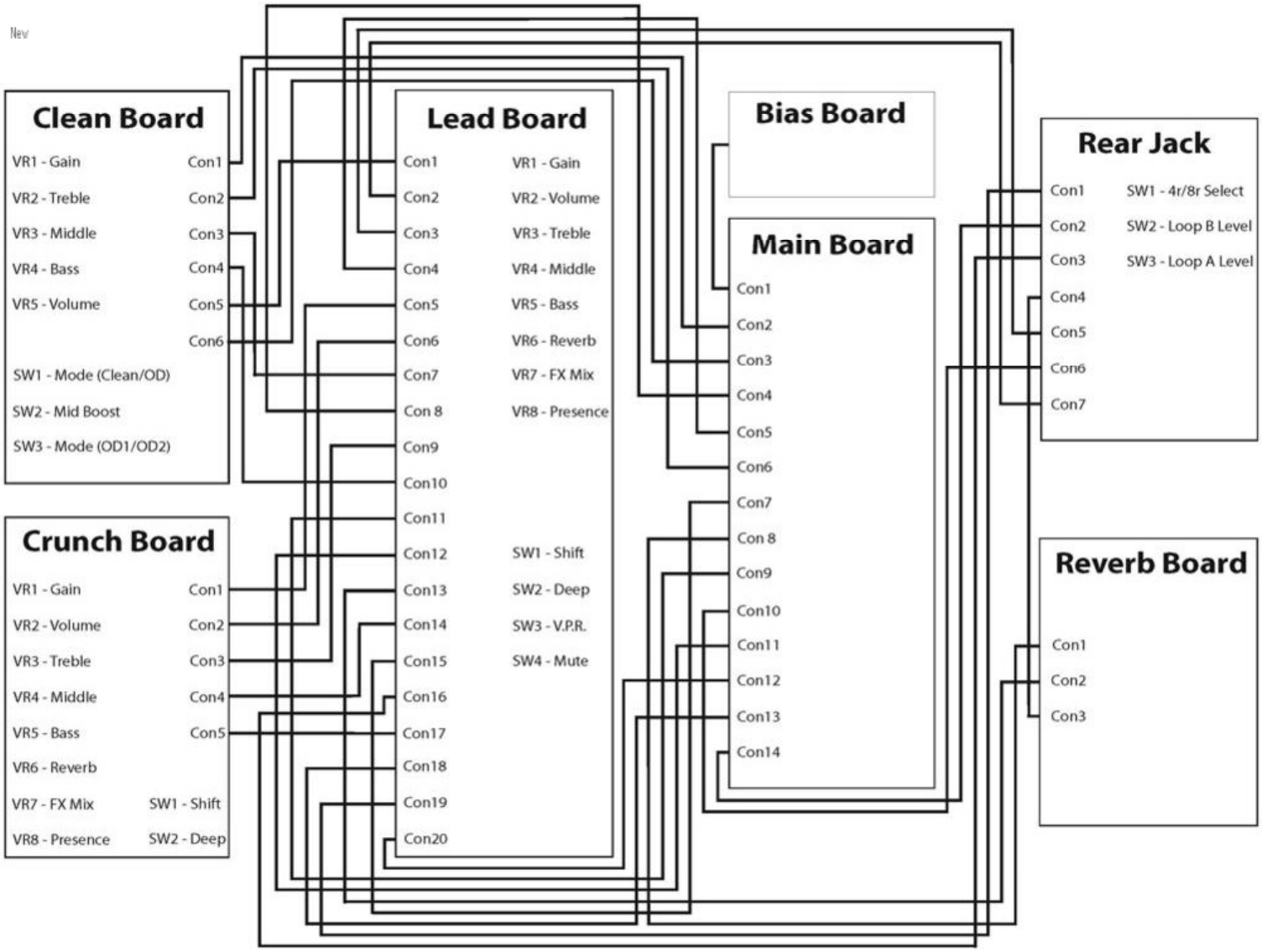
Nev
Clean Board
VR1 - Gain
VR2 - Treble
VR3 - Middle
VR4 - Bass
VR5 - Volume
SW1 - Mode (Clean/OD)
SW2 - Mid Boost
SW3 - Mode (OD1/OD2)
Con1
Con2
Con3
Con4
Con5
Con6
Crunch Board
VR1 - Gain
VR2 - Volume
VR3 - Treble
VR4 - Middle
VR5 - Bass
VR6 - Reverb
VR7 - FX Mix
VR8 - Presence
Con1
Con2
Con3
Con4
Con5
SW1 - Shift
SW2 - Deep
Lead Board
Con1
Con2
Con3
Con4
Con5
Con6
Con7
Con 8
Con9
Con10
Con11
Con12
Con13
Con14
Con15
Con16
Con17
Con18
Con19
Con20
VR1 - Gain
VR2 - Volume
VR3 - Treble
VR4 - Middle
VR5 - Bass
VR6 - Reverb
VR7 - FX Mix
VR8 - Presence
SW1 - Shift
SW2 - Deep
SW3 - V.P.R.
SW4 - Mute
Bias Board
Main Board
Con1
Con2
Con3
Con4
Con5
Con6
Con7
Con 8
Con9
Con10
Con11
Con12
Con13
Con14
Rear Jack
Con1
Con2
Con3
Con4
Con5
Con6
Con7
SW1 - 4r/8r Select
SW2 - Loop B Level
SW3 - Loop A Level
Reverb Board
Con1
Con2
Con3