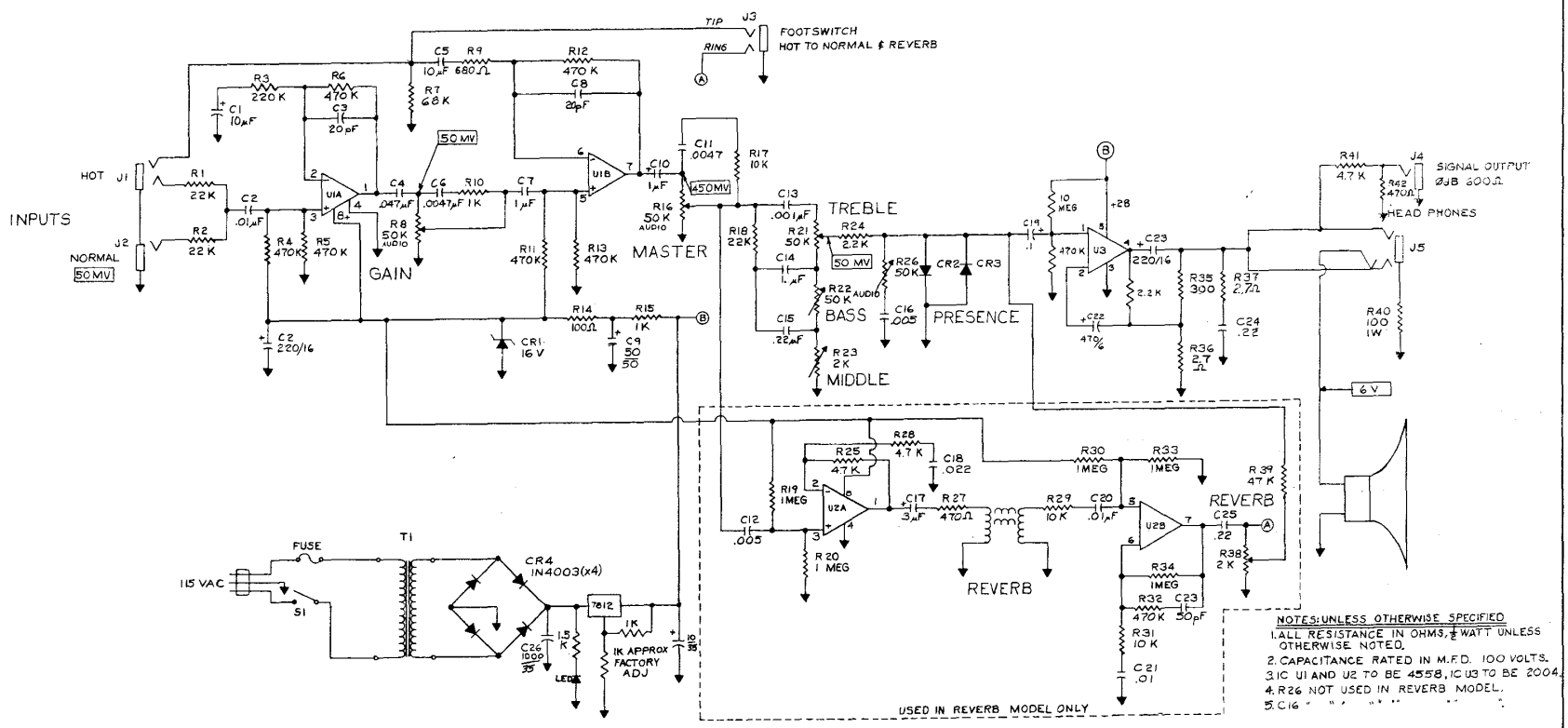

NOTES: UNLESS OTHERWISE SPECIFIED
1. ALL RESISTANCE IN OHMS, ½ WATT UNLESS OTHERWISE NOTED.
2. CAPACITANCE RATED IN M.F.D. 100 VOLTS.
3. IC U1 AND U2 TO BE 4558, IC U3 TO BE 2004.
4. R26 NOT USED IN REVERB MODEL.
5. C16 " " " " " " ".

Randall INSTRUMENTS INC. 586-1030 — 1132 DURYEA, IRVINE, CALIFORNIA 92714			
TOLERANCES: FRACTIONS: ± ANGLES: ± DECIMALS: .X ± .XX ± .XXX ±	SCALE OF DRAWING: —		TITLE: SCHEMATIC
	ENGR. Gary Surette	8-2-82	PART NO. RG-12
	DRAFT		ASSY NO. RG-12-110