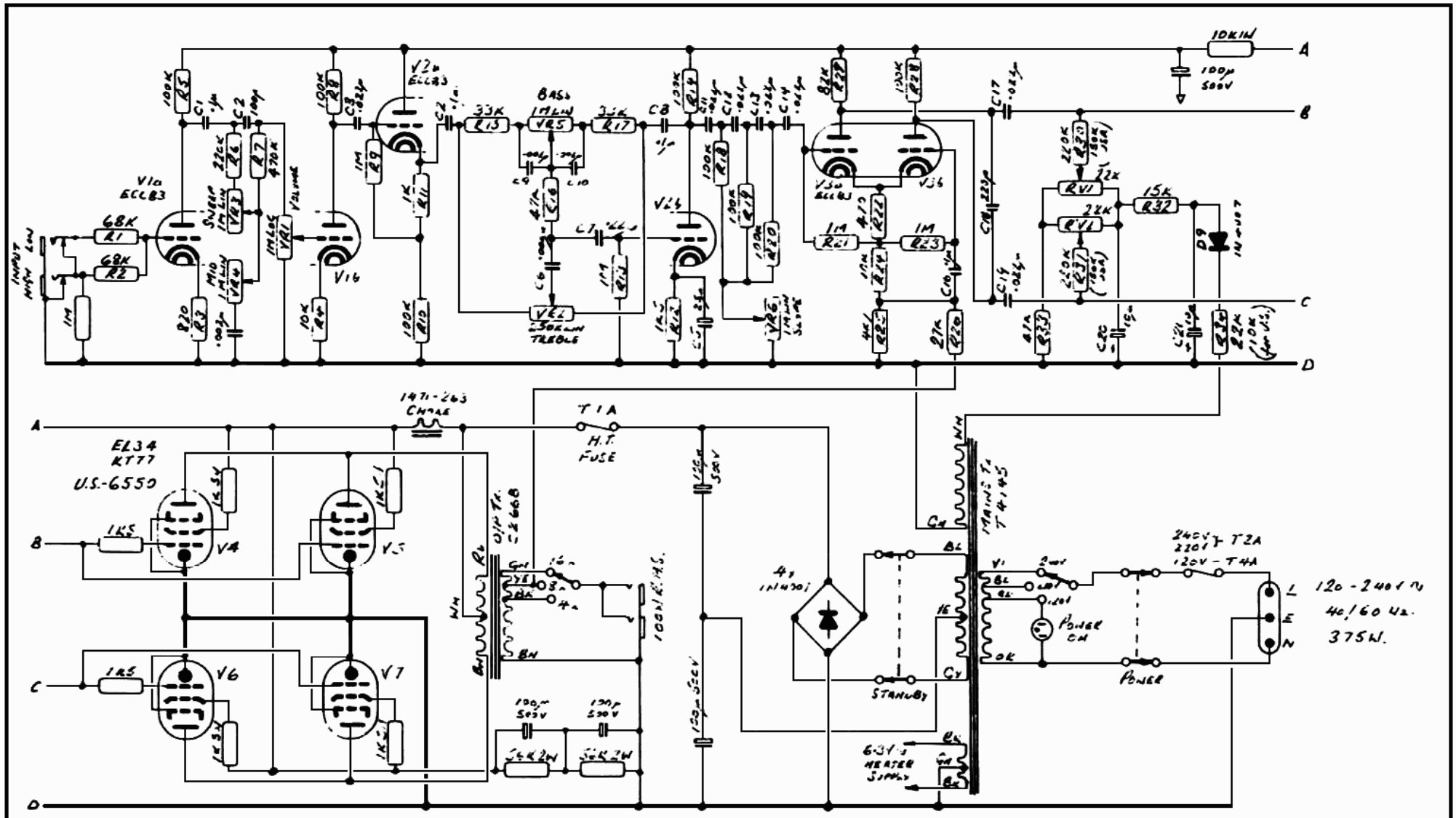

1	23-4-81	SG

© The Marshall Products Ltd. Bletchley England.

Marshall JCM 800 Series Model 1992 100W BASS AMP — CIRCUIT DIAGRAM