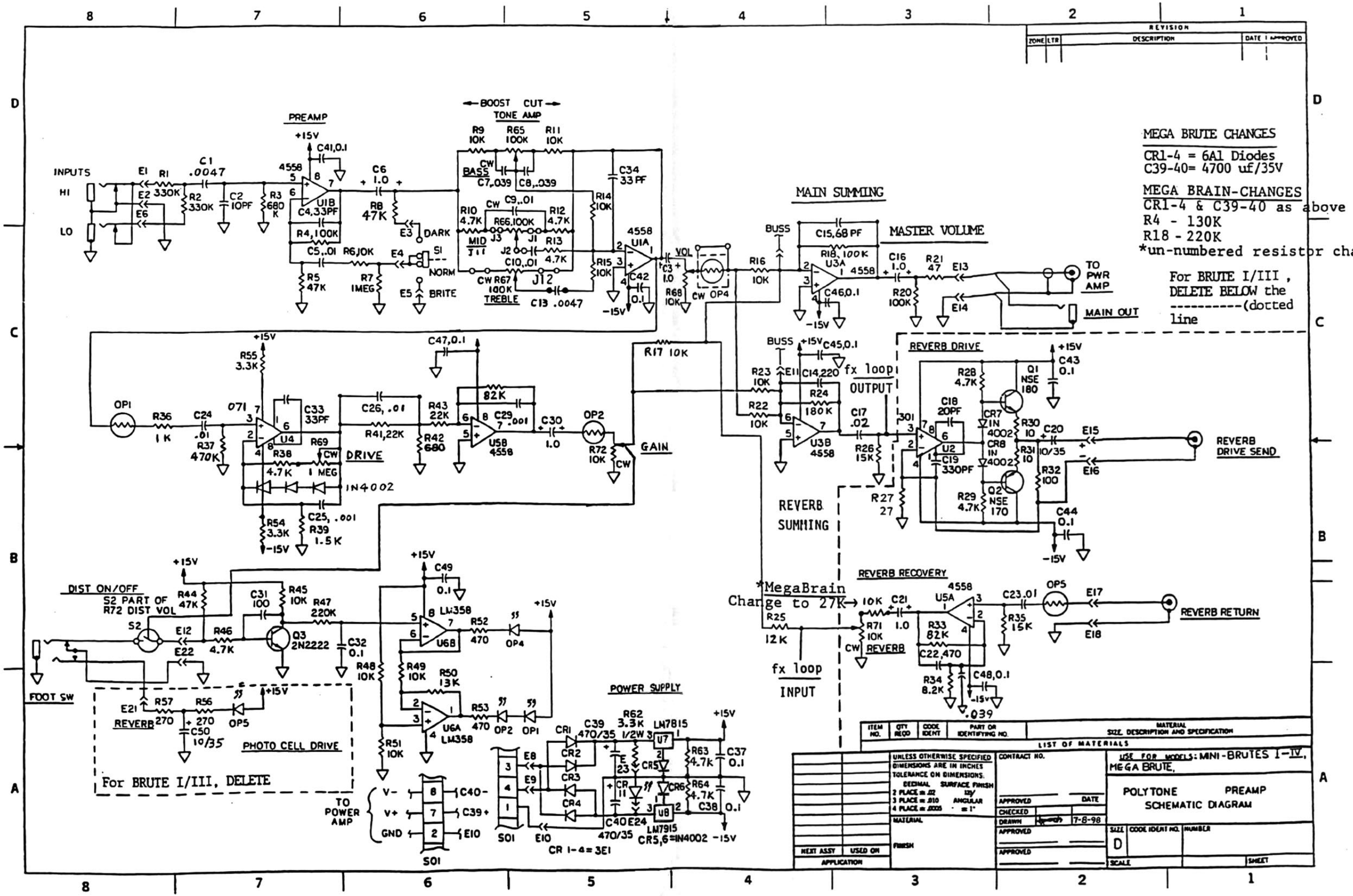
MEGA BRUTE CHANGES
CR1-4 = 6A1 Diodes
C39-40= 4700 uf/35V
MEGA BRAIN-CHANGES
CR1-4 & C39-40 as above
R4 - 130K
R18 - 220K
*un-numbered resistor change
For BRUTE I/III, DELETE BELOW the ----------(dotted line
PREAMP
BOOST CUT
TONE AMP
INPUTS
HI
LO
MAIN SUMMING
MASTER VOLUME
TO PWR AMP
MAIN OUT
REVERB DRIVE
REVERB DRIVE SEND
fx loop OUTPUT
REVERB SUMMING
REVERB RECOVERY
REVERB RETURN
*MegaBrain Change to 27K
fx loop INPUT
DRIVE
GAIN
DIST ON/OFF
S2 PART OF R72 DIST VOL
FOOT SW
REVERB
PHOTO CELL DRIVE
For BRUTE I/III, DELETE
POWER SUPPLY
TO POWER AMP
CR 1-4=3E1
CR5,6=1N4002
LIST OF MATERIALS
USE FOR MODELS: MINI-BRUTES I-IV, MEGA BRUTE,
POLYTONE PREAMP
SCHEMATIC DIAGRAM
7-8-98