usually 12AX7 in V1 & V2
try 12AU7 in V1 for more clean headroom,
12AT7 in V2 for smoother breakup
6V6, 6L6, 5881, KY88, 6550, EL34 for
power tube

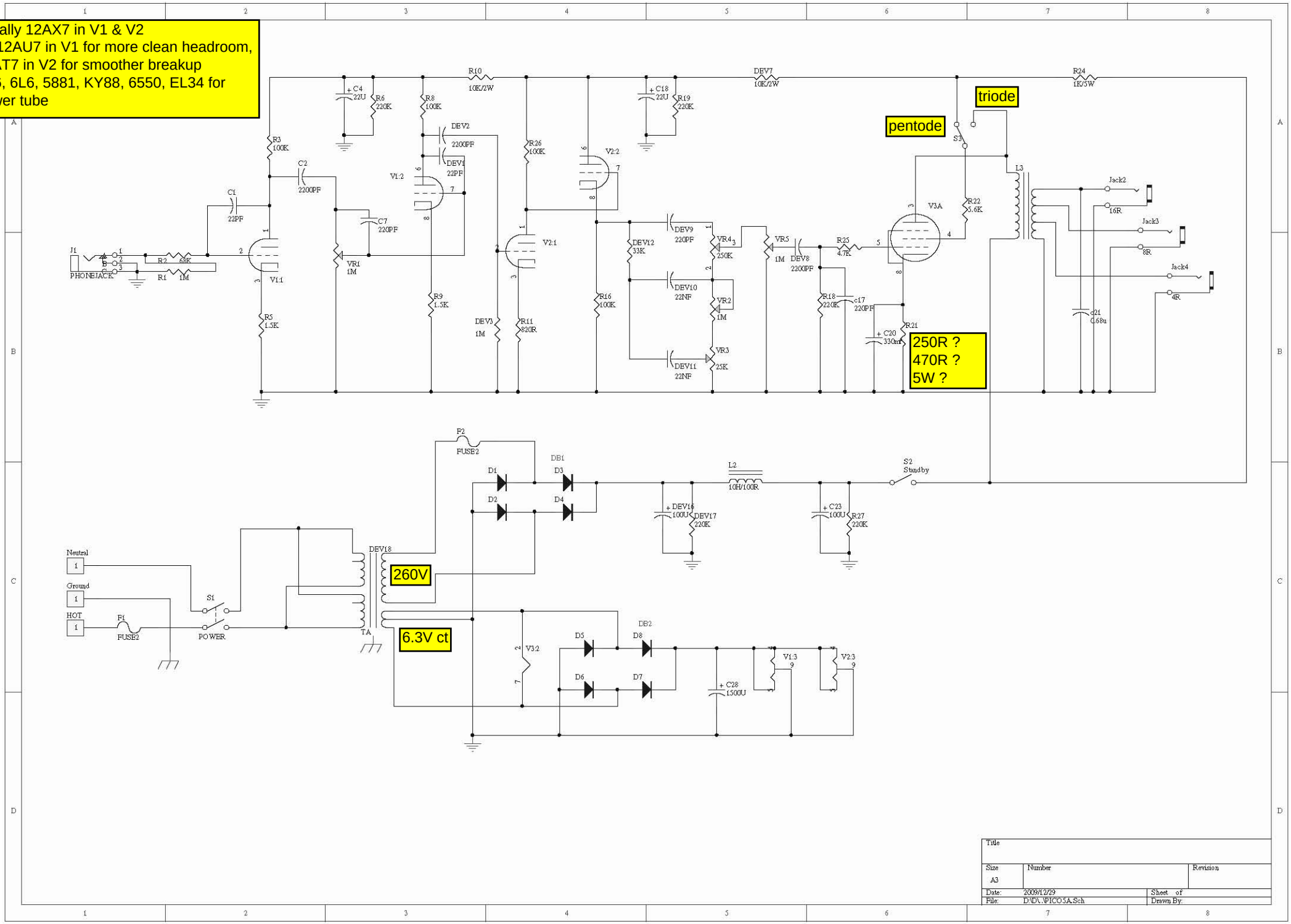

Title		
Size A3	Number	Revision
Date: 2009/12/29		Sheet of
File: D:\D\.\PICO5A.Sch		Drawn By:

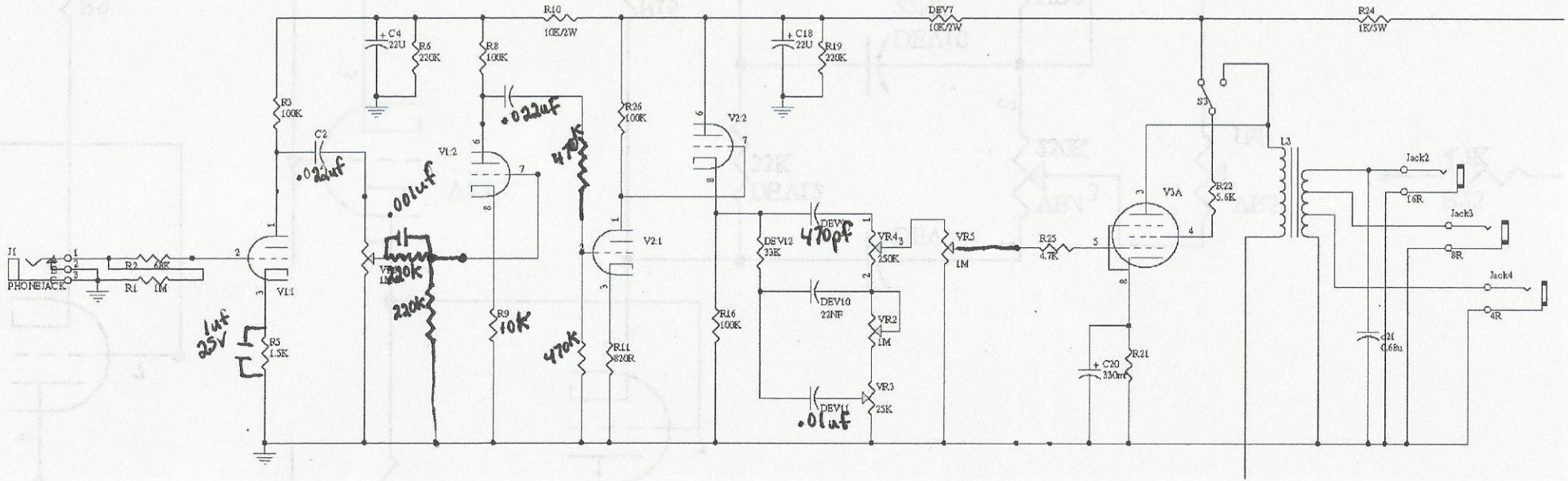
J1
PHONEJACK
R2 68K
R1 1M
VL1
R3 100K
C2
.022uf
R5 1.5K
1uf 25V
+ C4 22U
R6 220K
VR1 1M
.001uf
220K
R8 100K
.022uf
VL2
R9 10K
470K
R10 10K/2W
R26 100K
V2:1
R11 820R
470K
V2:2
R16 100K
+ C18 22U
R19 220K
DEV12 33K
DEV9 470pf
VR4 250K
DEV10 22NF
VR2 1M
VR3 25K
DEV11 .01uf
VR5 1M
R25 4.7K
DEV7 10K/2W
V3A
R22 5.6K
R21
+ C20 330mf
S3
L3
R24 1K/5W
Jack2
16R
Jack3
8R
Jack4
4R
C21 0.68u