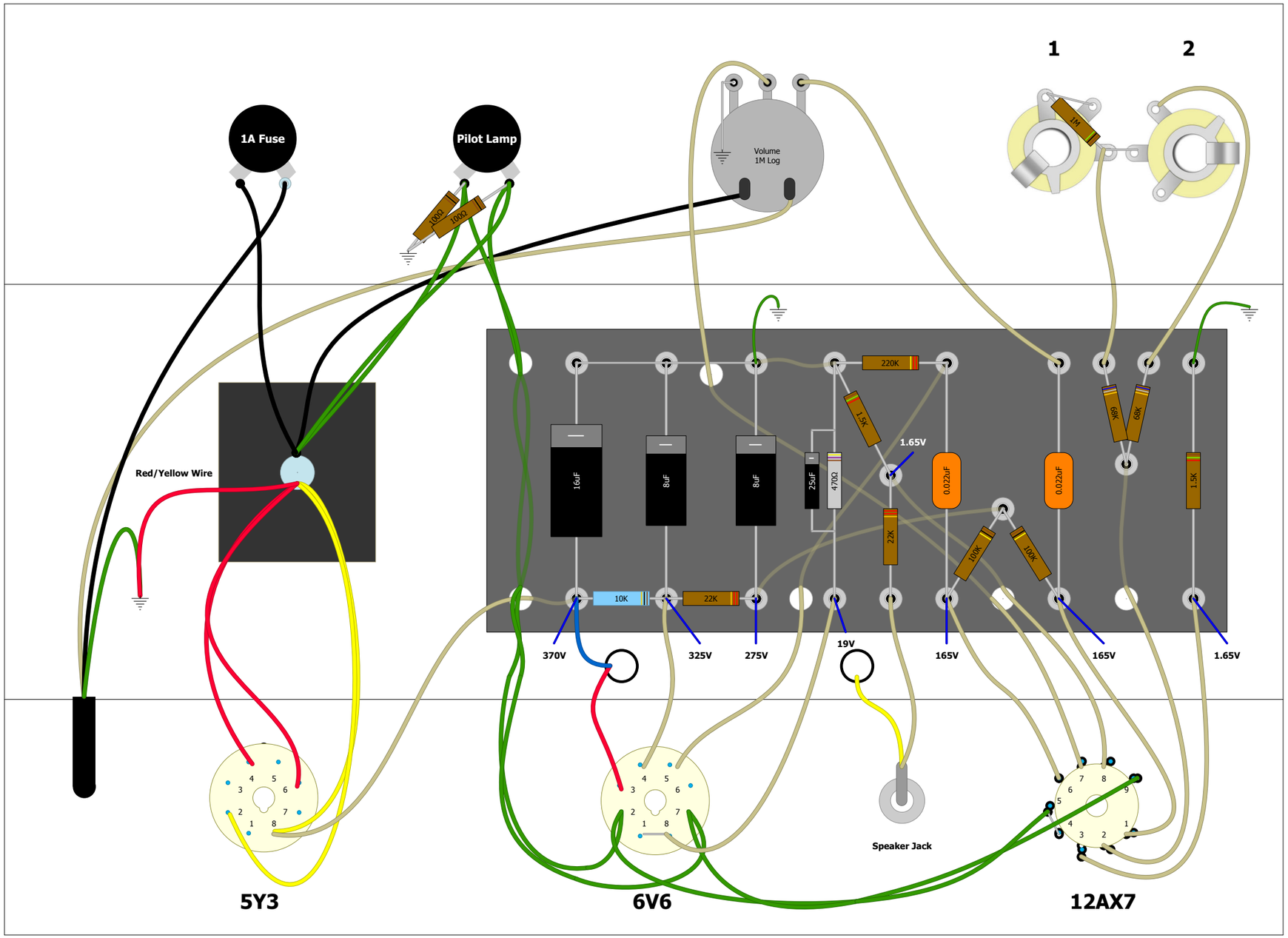

***DC Voltages read to ground with voltmeter.

Values shown + or - 10%

Fender "Champ" Layout Model 5F1
Author:
Steve Snyder
Mojotone
Revision 1.0 **Date: 1/22/2013**