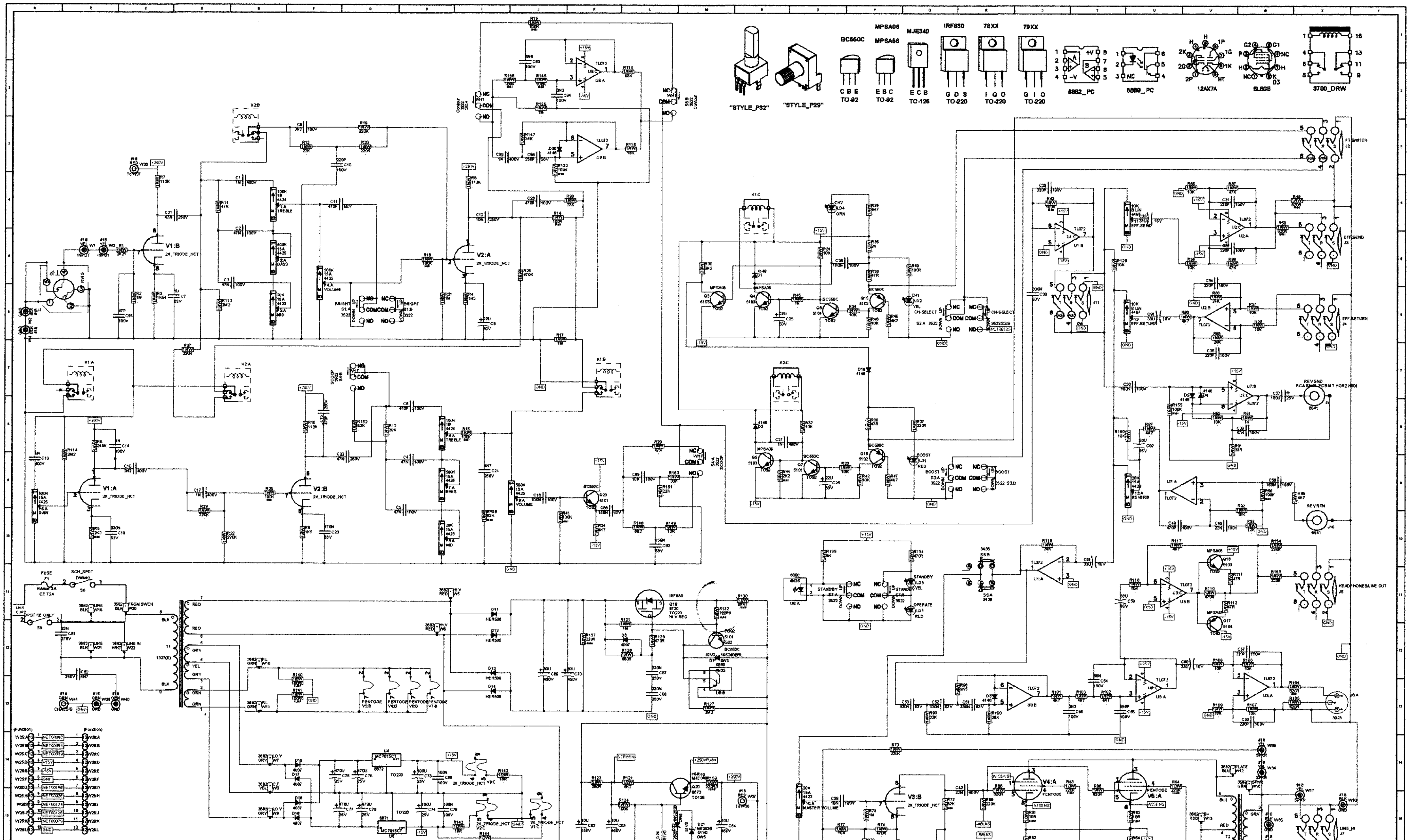

M602 PCB DATABASE HISTORY

MODEL(S):- YCV80

#	DATE	VER#	DESCRIPTION OF CHANGE
1	2001 06 08	1.00p0	First Prototype
2	2001 06 06	1.00p1	Remove cutouts for BE tube sockets, move ribbons cables
3	.	.	to line up, change shearing to routing
4	2001 07 05	1.00p2	Moved Send and Return pots out 0.075"
5	.	.	Added Skm outline to BE tube sockets
6	2001 08 13	1.00	Value changes to tweak sound
7	2001 09 20	2.00	Add C166 10N across R122
8	.	.	Move C93 47P to be across R2
9	.	.	Add R160 10K from wiper to top of P13
10	.	.	Add R159 in series with Q20 output.
11	2001 10 10	2.10	pc#6544 D6 30V ->33V, C19 150N ->330N, C20 330N->470N,
12	.	.	C16 1N->470P, C17 470P->1N, R23,R23 470K->220K
13	.	.	C39, C40 100N->10N

M602

MODEL(S):- YCV80

#	DATE	VER#	DESCRIPTION OF CHANGE
1	NOV 18 2002	7.00	MOVE D11 D12 D13 D14 TO ELIMINATE
2			SHORTS
3	NOV-01-2004	8.00	PC#6728:TUBE LABELS UPDATED TO V1 TO V7 (GT)
4	JAN/04/2005	8.10	PC#6789 D11,D12,D13,D14 1N5408 TO HER508 (HG)
5	JAN-06-2005	.	ADDED Z437 HEATSINK (GT)
6	APR-15-2005	.	PC#6793, PC#6795: FIX BREAKAWAY AND RTE NEAR S6
7	MAY-17-2005	9.00	GT:FORCE UPDATE PADS REQUIRED TRACE CHANGES
8	.	.	R94 #4849 -> #4796 180K, REPLACED LEAD_SIZE PARTS
9	MAY/12/06	10.00	PC#7125:HG: RCA JACKS #3914 TO #6541
10	MAY/23/06	.	PC#7091:HG: #3622 SWITCH HOLES 0.031" TO 0.040"
11	D	V	N
12	D	V	N
13	D	V	N

MODEL(S):- YCV80

#	DATE	VER#	DESCRIPTION OF CHANGE
1	2001 10 17	2.20	PC#6466 C16 1N TO 2N2, C11 220p TO
2	.	.	470P, R148 10K TO 8K2
3	NOV 30 2001	2.30	PC#6475 REPLACE R126,R122,C87,Q21 WITH D6,D22,D23,D24
4			D25,D26 51V ZENER IN SERIES
5			C86 220N/250V TO 10u/450V
6	JAN/17/02	3.00	PC#6494 UPDATE SOLDERMASK FOR RCA JACKS AND TABS
7	FEB/26/02	4.00	PC#6512 D11,12,13,14 MR854 TO 1N5408
8	D	V	NEW PADS FOR TABS, RCA JACKS
9	Apr 10,2002	5.00	new pads and holes for 3921 jack
10	APR 29 02	.	C15 MOVED ADD JUMPER X64
11	JUN 26 2002	6.10	PC#6541 R124 100K TO 47K
12	JUL 06 2002	6.00	PC#6544 MOVE TRACES RE SLD BRDGING
13	SEP 03, 2002	6.10	PC#6563 R124 47K TO 100K D25 TO A JMP

POTLIST

MODEL(S):- YCV80

REF	FUNCTION	PART#	KNOB	{NEW}
P1,P6	TREBLE	4424	8430	N
P2,P7	BASS	4426	8430	N
P3,P8	MID	4423	8430	N
P5	GAIN	4426	8430	N
P11	EFF.SEND	4487	N/A	N
P12	EFF.RETURN	4487	N/A	N
P10	PRESCENCE	4423	8430	N
P13	REVERB	4423	8430	N
P4,P9	VOLUME	4425	8430	N
R	F	P	K	N
R	F	P	K	N
R	F	P	K	N

Yorkville	Product YCV80		
	Guitar Amp	PCB# M602	Sheet 1 of 2
	Date: Tue Sep 05, 2006		Rev:10.00
	Filename: M602-10V00sch.SCH2002		