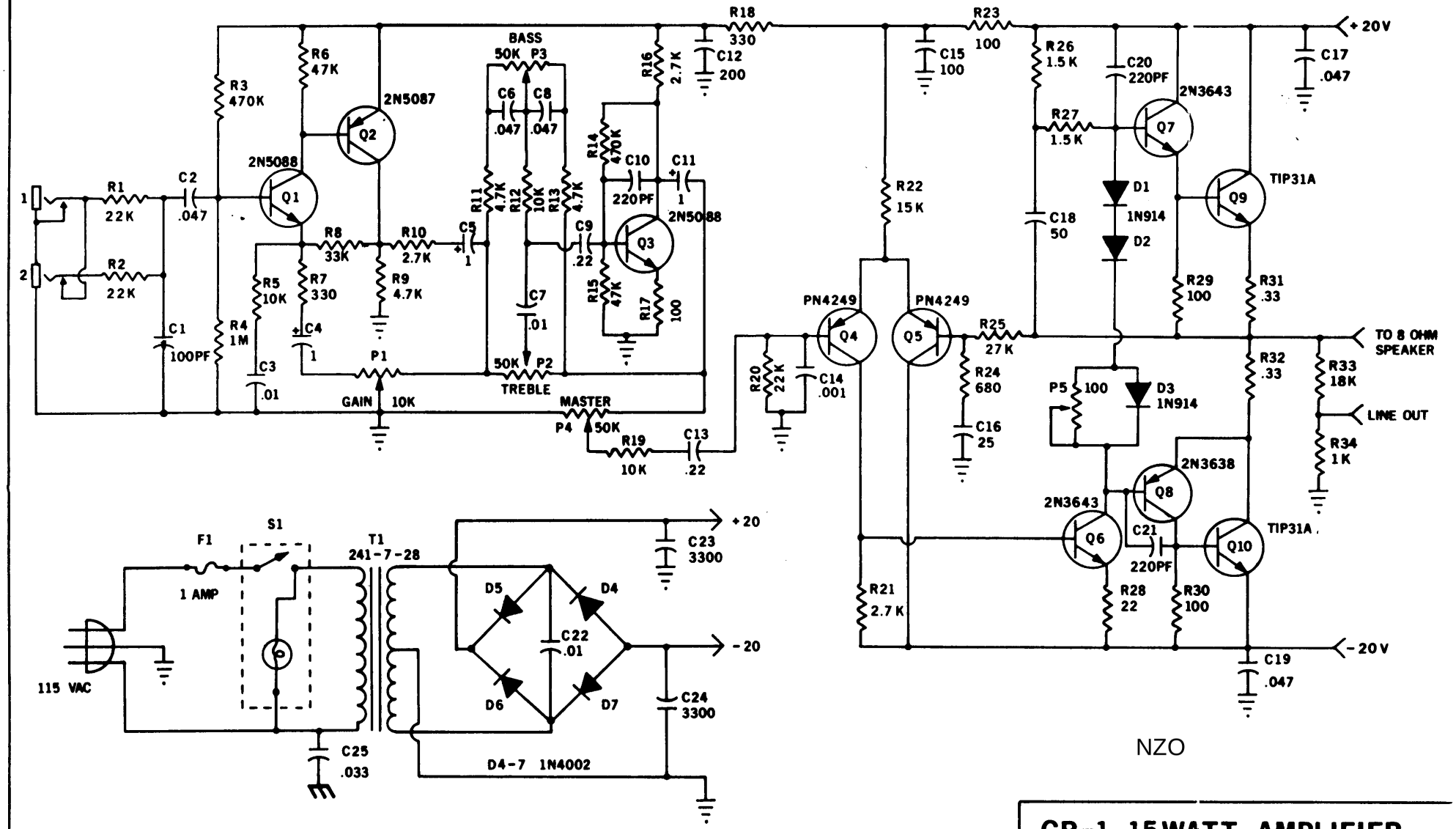

NZO

CR-1 15WATT AMPLIFIER

SLM ELECTRONICS
1400 FERGUSON
ST. LOUIS, MO. 63138