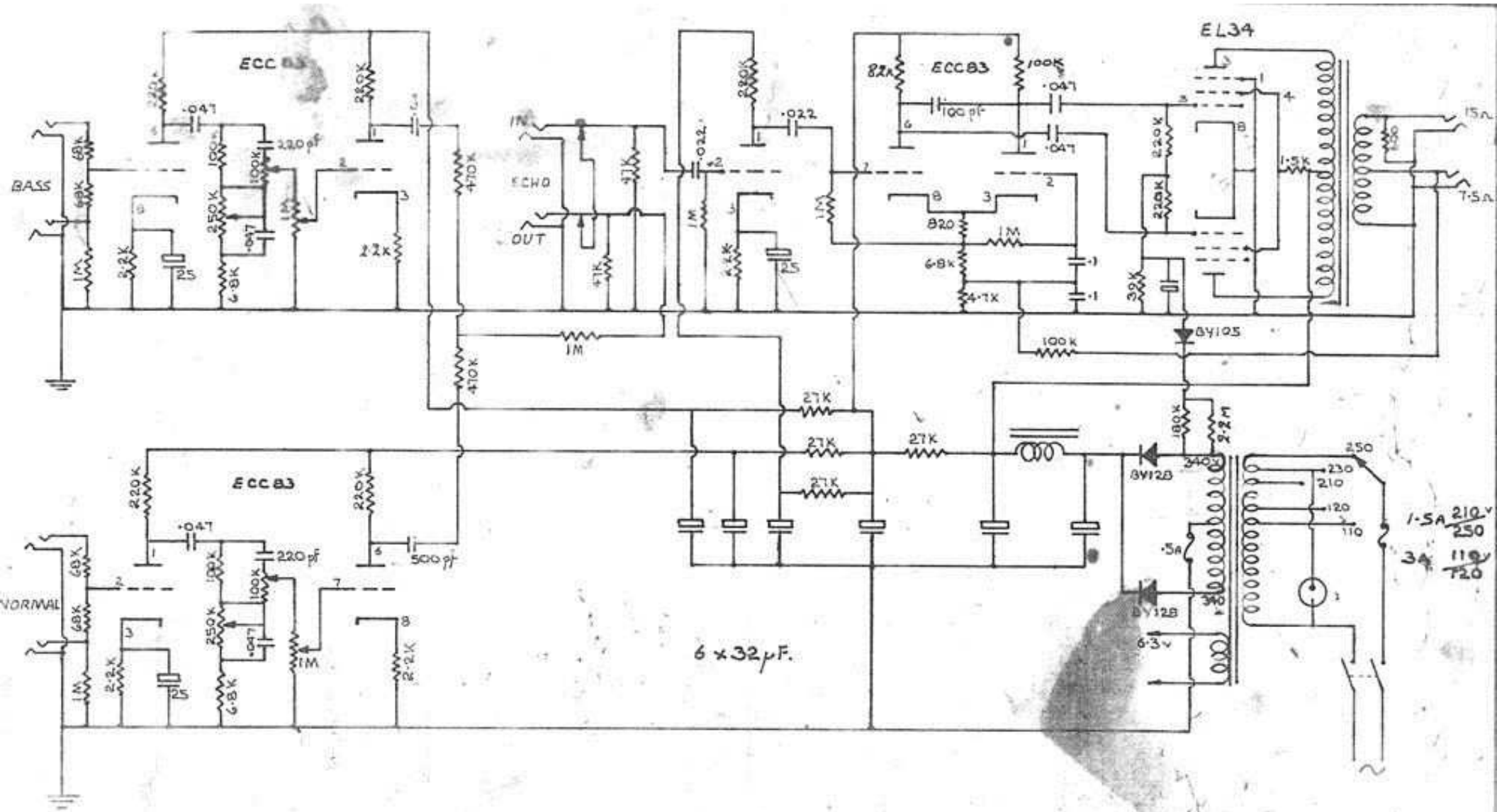

TREBLE 'N' BASS 50. MK III

2556/D101