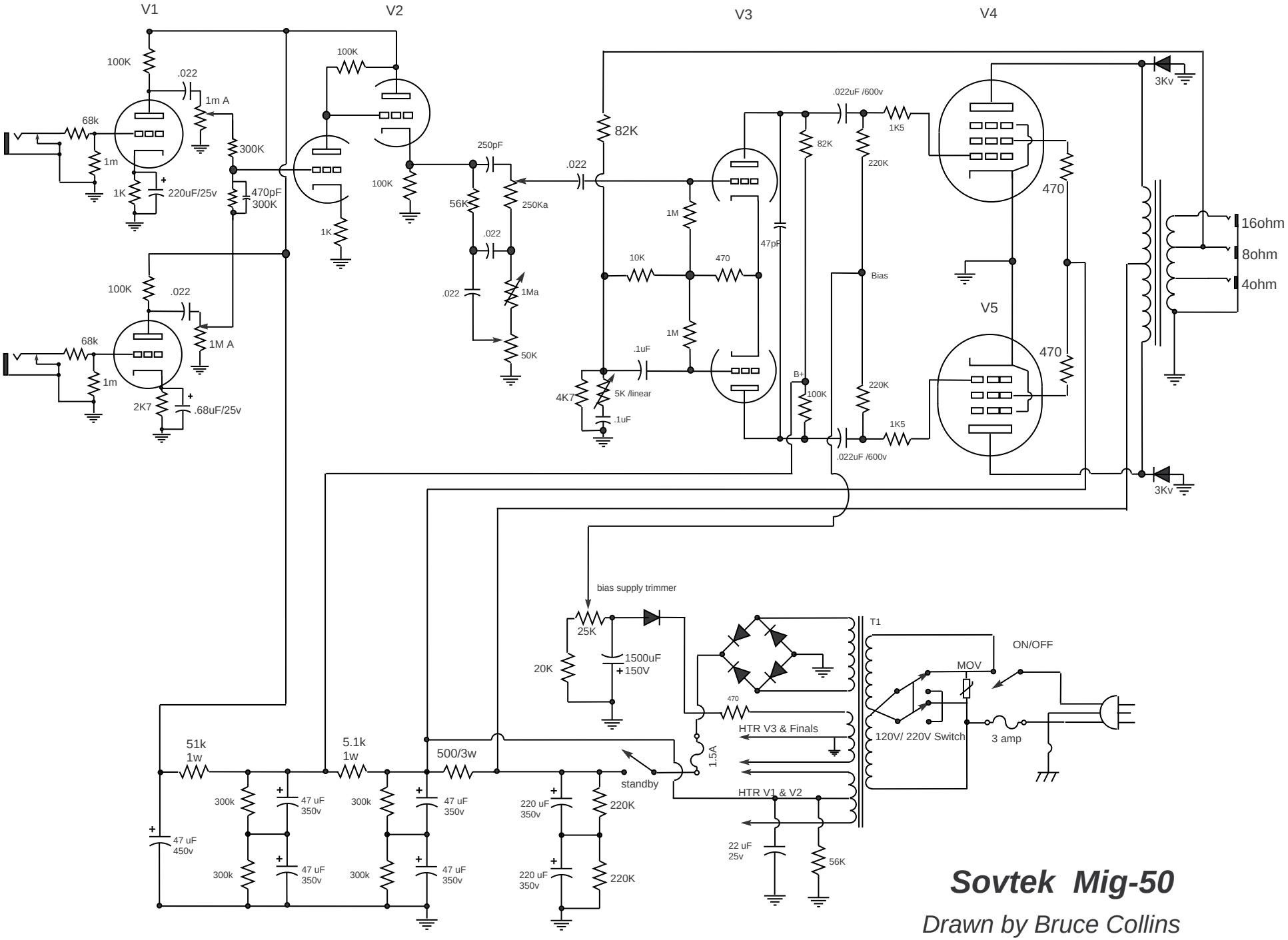

Sovtek Mig-50

Drawn by Bruce Collins
Mission Amps Arvada, CO.