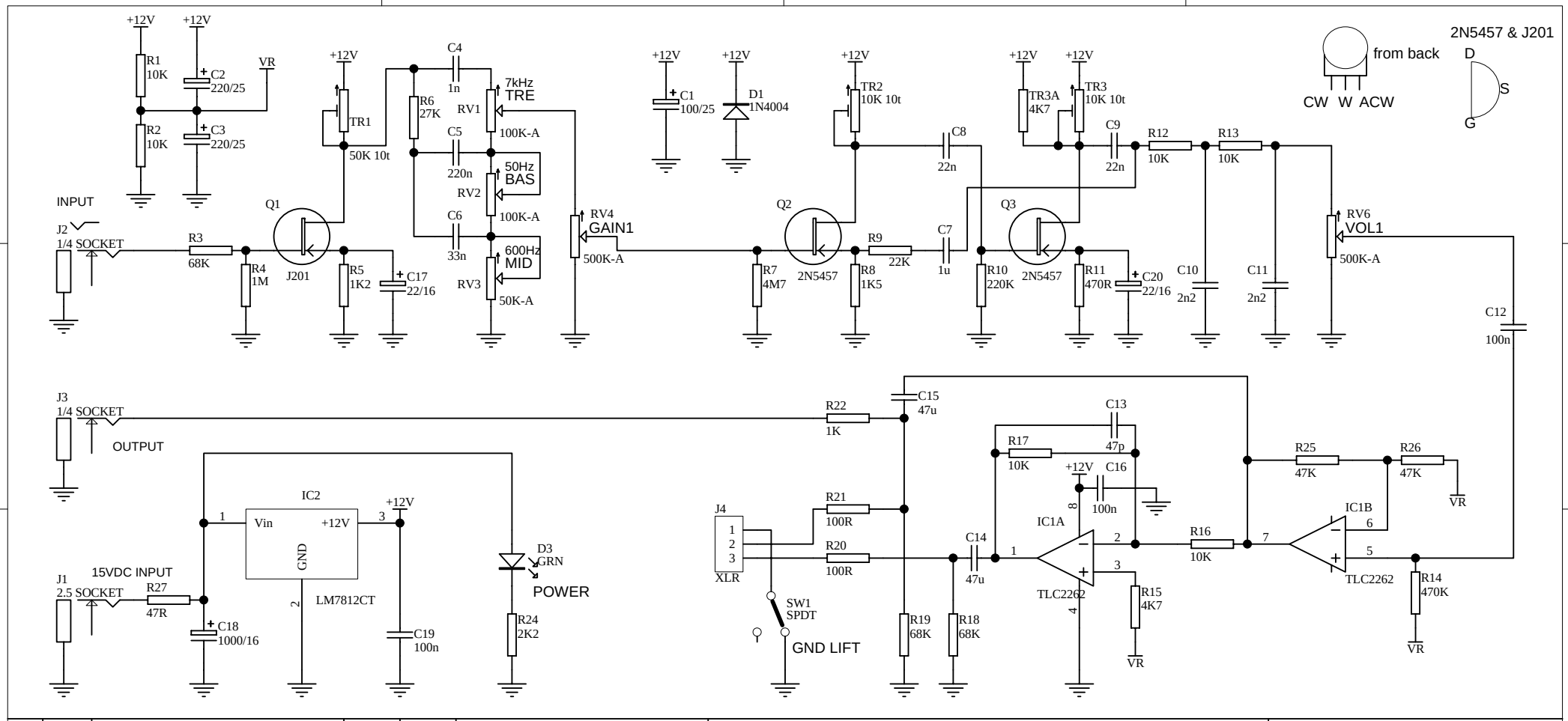

					FINISH				REF. ASSY
						SCALE	DRAWN AM	DATE 12/10	PASSED AM
					UNLESS OTHERWISE SPECIFIED	AUXILIARY TITLE			PART No.
					ALL DIMENSIONS IN MILLIMETERS ANGLES +/- 1 DEGREE SURFACE FINISH -N8 DIMENSIONS +/- 0,5 mm	PRIME TITLE JAMES HARP PREAMP			PCB ARTWORK ISSUE
					FITS - THREADS; NUT 6H; BOLT 6g HOLES H13	MOZ ELECTRONICS			ISSUE 1
No.	ZONE	REVISION	EC No.	DATE					SHEET 1 OF 1

A4