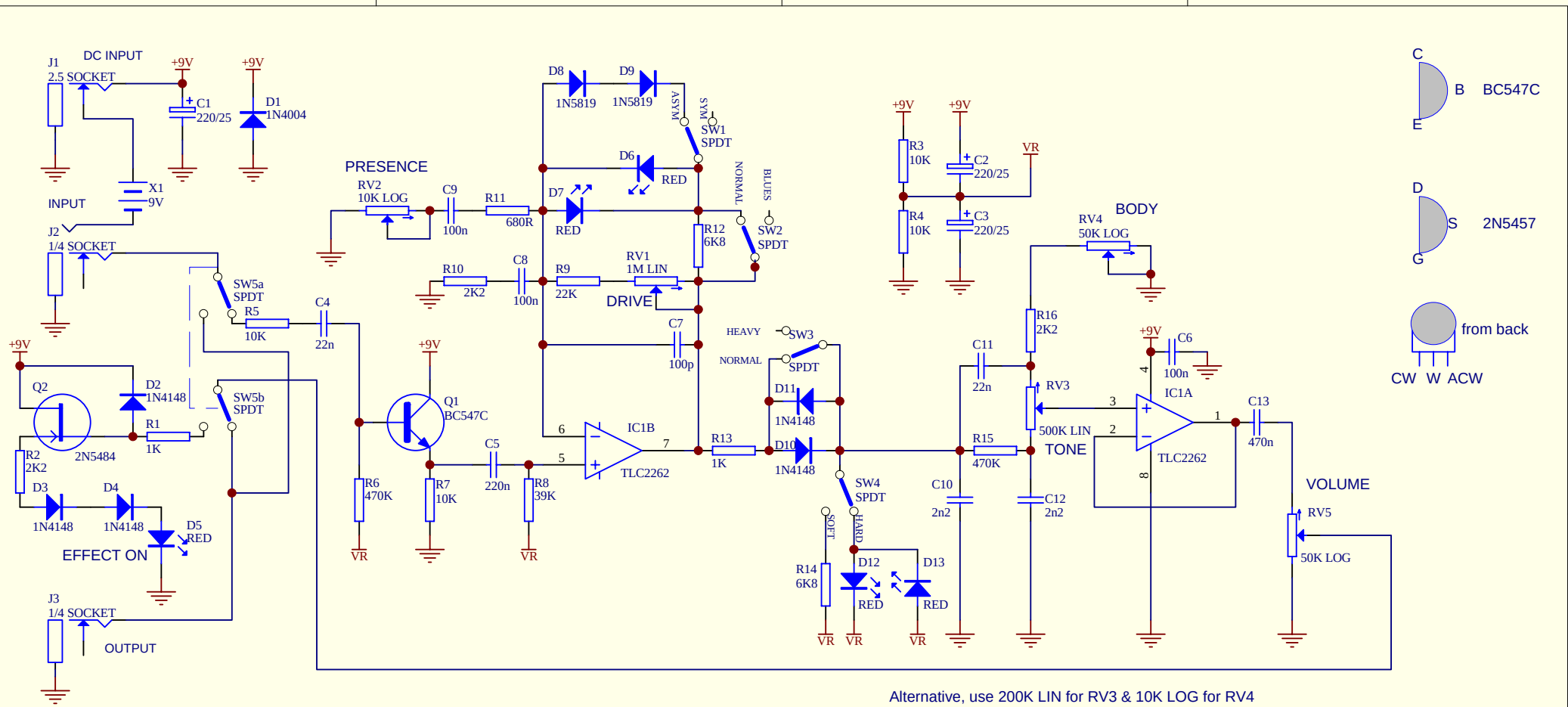

Alternative, use 200K LIN for RV3 & 10K LOG for RV4

No.	ZONE	REVISION	EC No.	DATE

FINISH

UNLESS OTHERWISE SPECIFIED

ALL DIMENSIONS IN MILLIMETERS
ANGLES +/- 1 DEGREE
SURFACE FINISH -N8
DIMENSIONS +/- 0,5 mm

FITS - THREADS; NUT 6H; BOLT 6g
HOLES H13

SCALE	DRAWN AM	DATE 12/10	PASSED AM

AUXILIARY TITLE

PRIME TITLE

GREEN OVERDRIVE

MOZ ELECTRONICS

REF. ASSY

PART No.

PCB ARTWORK ISSUE

ISSUE 1

SHEET 1 OF 1

A4