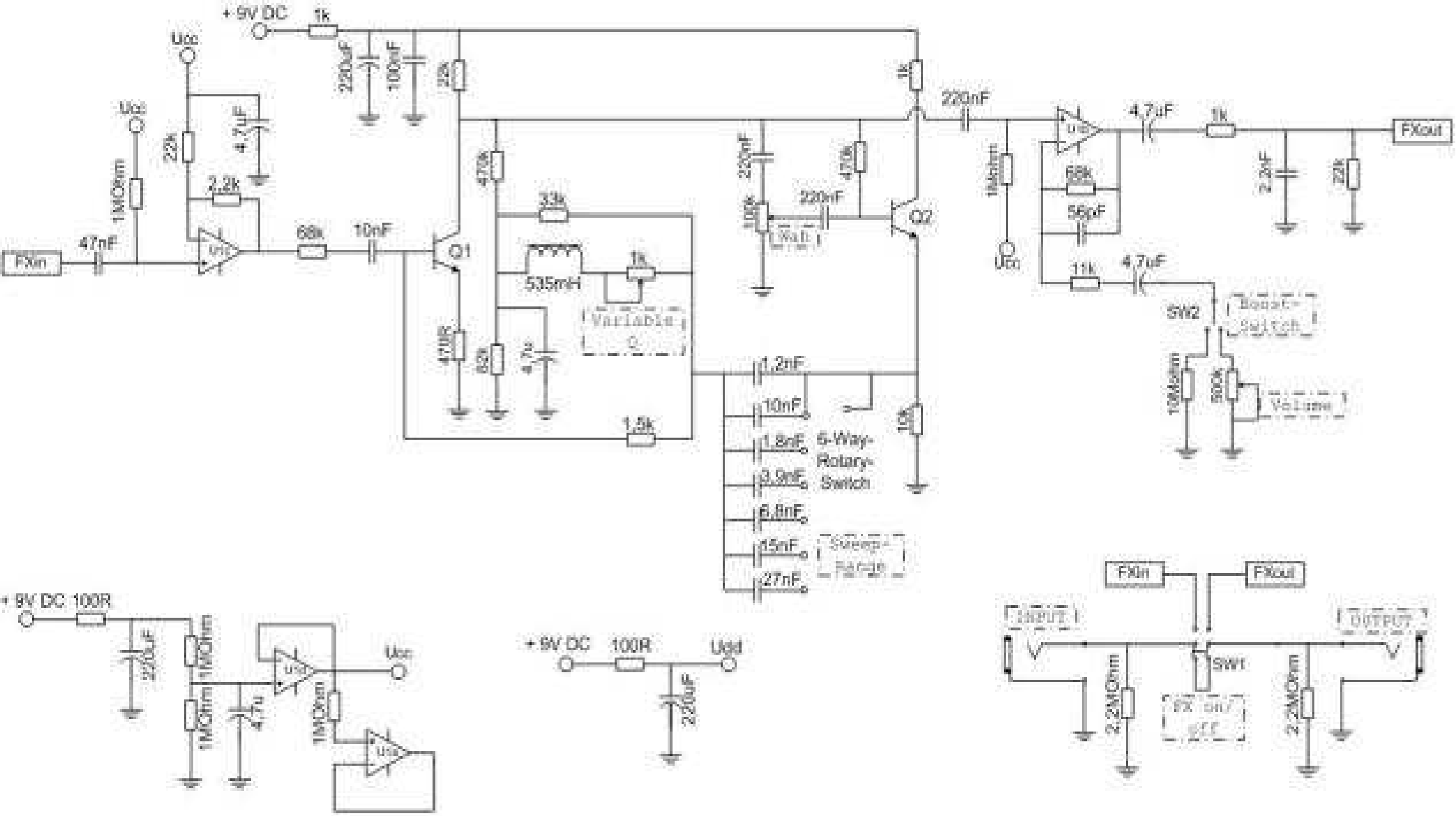

Notes:
- IC 1 are MC33174
- Q 1+2 are MMBT5089
- Connect IC1 Pin 4 to Ucc, Pin 11 to GND
- True Bypass Version!
- Circuit NOT tested!!

jim dunlop 535Q Multi Wah	
REV. : 1.3	Date: February 2005
Sheet: 1/1	Drwan by KHE