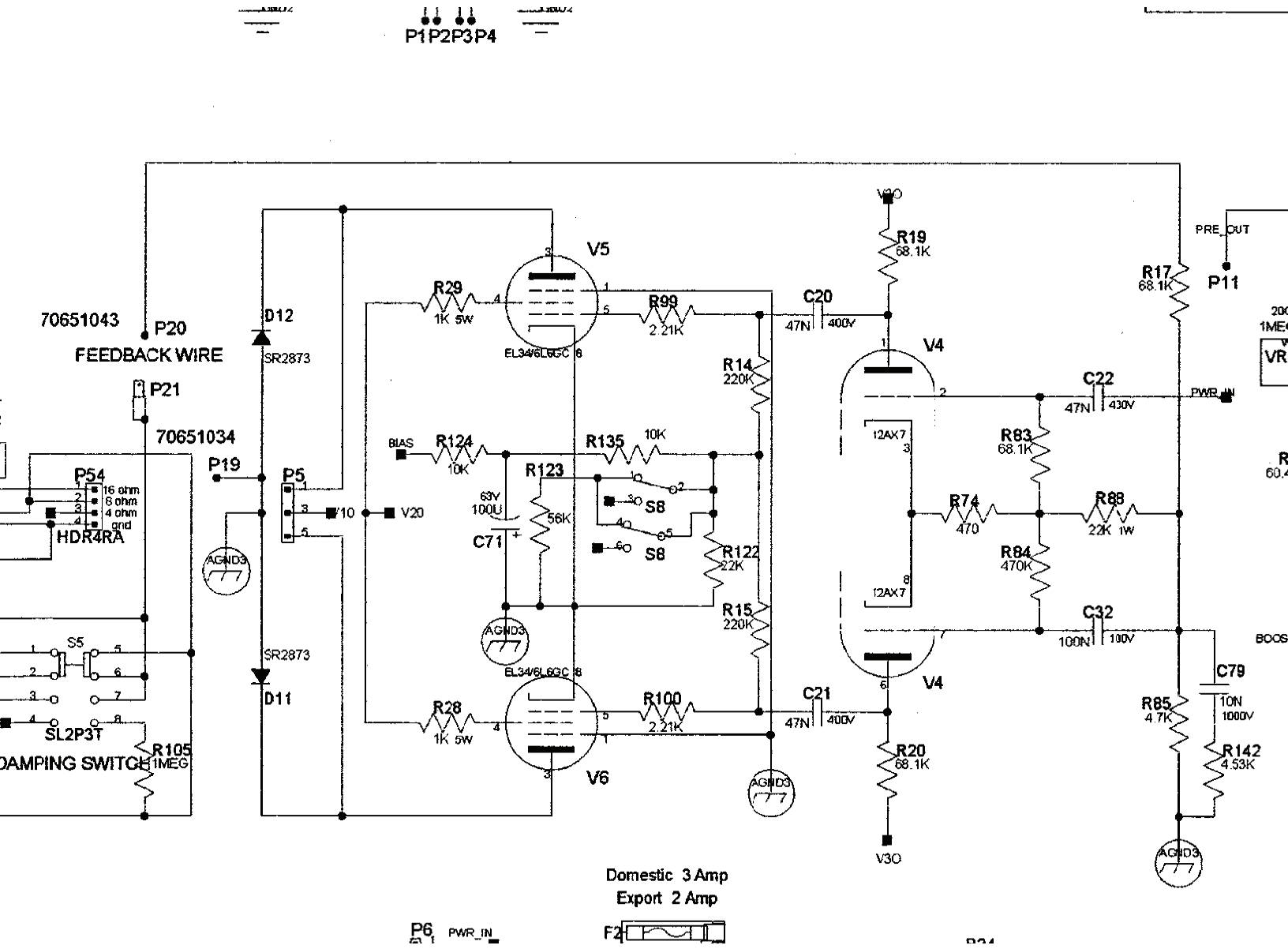
P1 P2 P3 P4
70651043
P20
FEEDBACK WIRE
P21
70651034
P19
P54
16 ohm
8 ohm
4 ohm
gnd
HDR4RA
S5
SL2P3T
DAMPING SWITCH
R105
1MEG
D12
SR2873
D11
SR2873
P5
V10
V20
AGND3
V5
V6
EL34/6L6GC
R29
1K 5W
R28
1K 5W
R99
2.21K
R100
2.21K
R124
10K
R135
10K
R123
56K
63V
100U
C71
S8
S8
R14
220K
R15
220K
R122
22K
C20
47N
400V
C21
47N
400V
V4
12AX7
V4
12AX7
R19
68.1K
R20
68.1K
V3O
R83
68.1K
R84
470K
R74
470
R88
22K 1W
C22
47N
430V
C32
100N
100V
R17
68.1K
PRE_OUT
P11
PWR_IN
C79
10N
1000V
R85
4.7K
R142
4.53K
Domestic 3 Amp
Export 2 Amp
P6
PWR_IN
F2