FENDER MODEL "VIBROLUX REVERB-AMP AA270" SCHEMATIC

THIS PRODUCT MANUFACTURED UNDER ONE OR MORE OF THE FOLLOWING U.S. PATENTS- #2817706, #2973481, 192859 / PATENTS PENDING.

NOTICE

1- VOLTAGES READ TO GROUND WITH ELECTRONIC VOLTMETER VALUES SHOWN + OR - 20%
2- ALL RESISTORS ½ WATT 10% TOLERANCE IF NOT SPECIFIED.
3- ALL CAPACITORS AT LEAST 400 VOLT RATING IF NOT SPECIFIED.
4.- VIBRATO GROUNDED

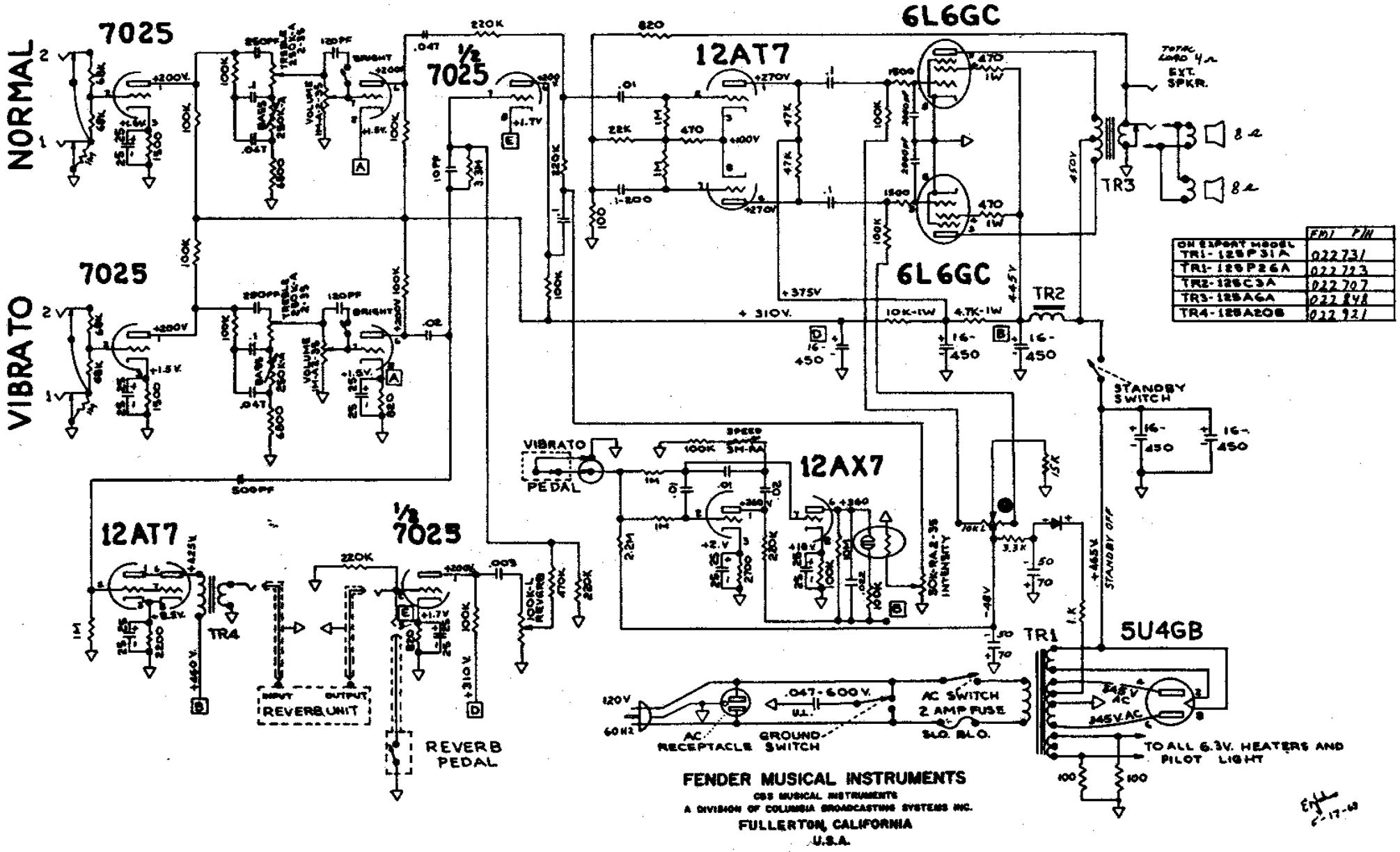

	EMI P/N
ON EXPORT MODEL	
TR1-125P31A	022731
TR1-125P26A	022723
TR2-125C3A	022707
TR3-125AGA	022848
TR4-125A20B	022921

REVISIONS			
F	INCORPORATED ECO# 2053	2/17/70	
E	INCORPORATED ECO# [illegible]	[illegible]	
D	INCORPORATED ECO# [illegible]	[illegible]	
C	INCORPORATED ECO# [illegible]	[illegible]	
B	INCORPORATED ECO# 1050	5-29-68	

DWG. TITLE: SCHEMATIC & WIRING DIAGRAM VIBROLUX REVERB-AMP

SIZE: D | DWG. NO. 045443 | REV. F

SCALE: NONE | MODEL: TUBE TYPE VIBROLUX REV-AMP | SHEET 1 OF 2