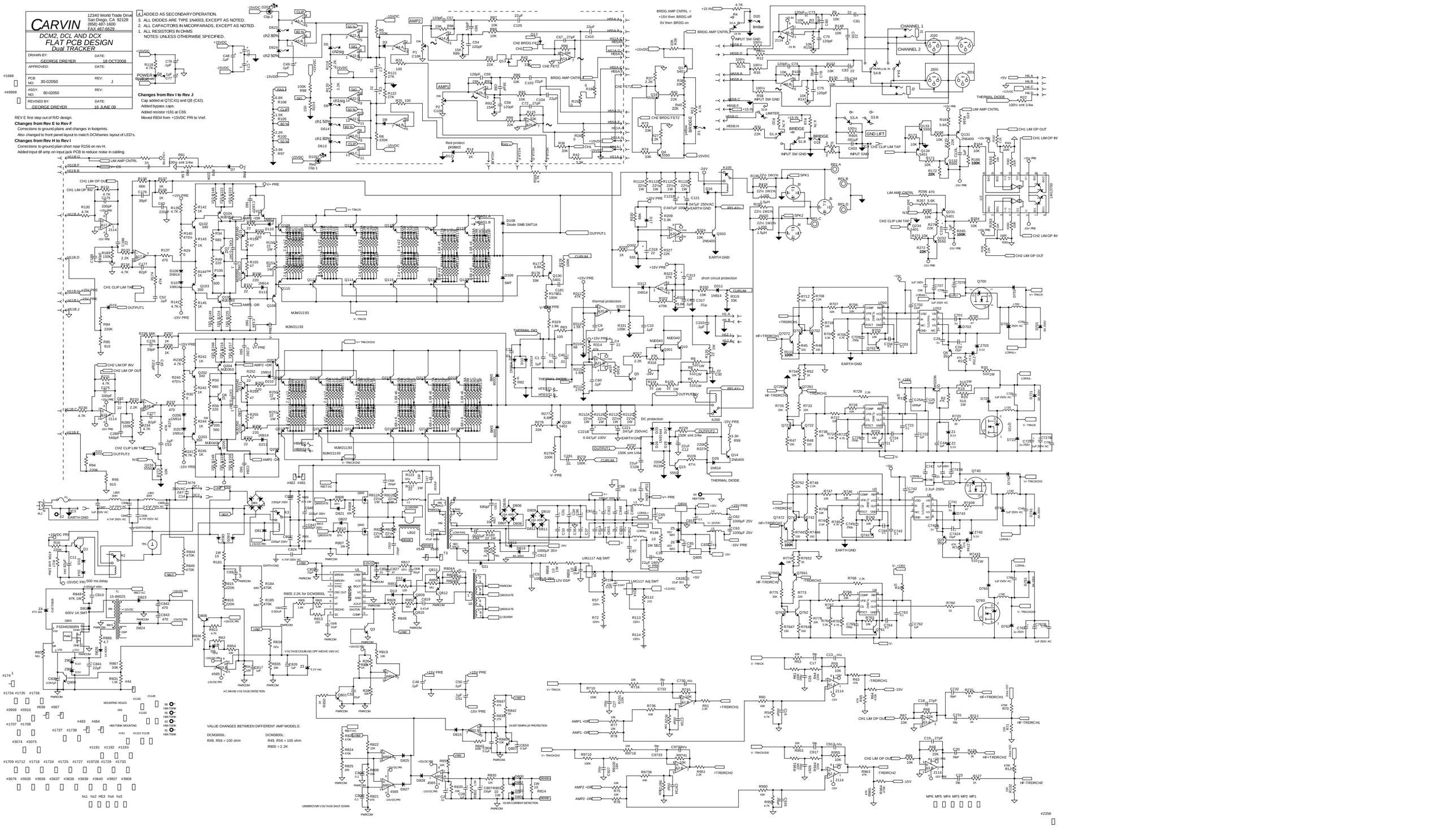
CARVIN
12340 World Trade Drive
San Diego, CA 92128
(858) 487-1600
FAX 487-6629
DCM2, DCL AND DCX
FLAT PCB DESIGN
Dual TRACKER
DRAWN BY: GEORGE DREYER
DATE: 18 OCT2008
APPROVED:
DATE:
PCB NO: 30-02050
REV: J
ASSY. NO: 80-02050
REV:
REVISED BY: GEORGE DREYER
DATE: 16 JUNE 09
#1688
#49998
4. ADDED AS SECONDARY OPERATION.
3. ALL DIODES ARE TYPE 1N4003, EXCEPT AS NOTED.
2. ALL CAPACITORS IN MICORFARADS, EXCEPT AS NOTED.
1. ALL RESISTORS IN OHMS
NOTES: UNLESS OTHERWISE SPECIFIED.
Changes from Rev I to Rev J
Cap added at Q7(C41) and Q8 (C42).
Added bypass caps.
Added resistor r181 at C69.
Moved R834 from +15VDC PRI to Vref.
REV E first step out of R/D design.
Changes from Rev E to Rev F
Corrections to ground plains and changes in footprints.
Also changed to front panel layout to match DCMseries layout of LED's.
Changes from Rev H to Rev I
Corrections to ground plain short near R156 on rev H.
Added input dif amp on input jack PCB to reduce noise in cabling.
VALUE CHANGES BETWEEN DIFFERENT AMP MODELS:
DCM3000L:
R49, R56 = 100 ohm
DCM3800L:
R49, R56 = 100 ohm
R805 = 2.2K
#2358