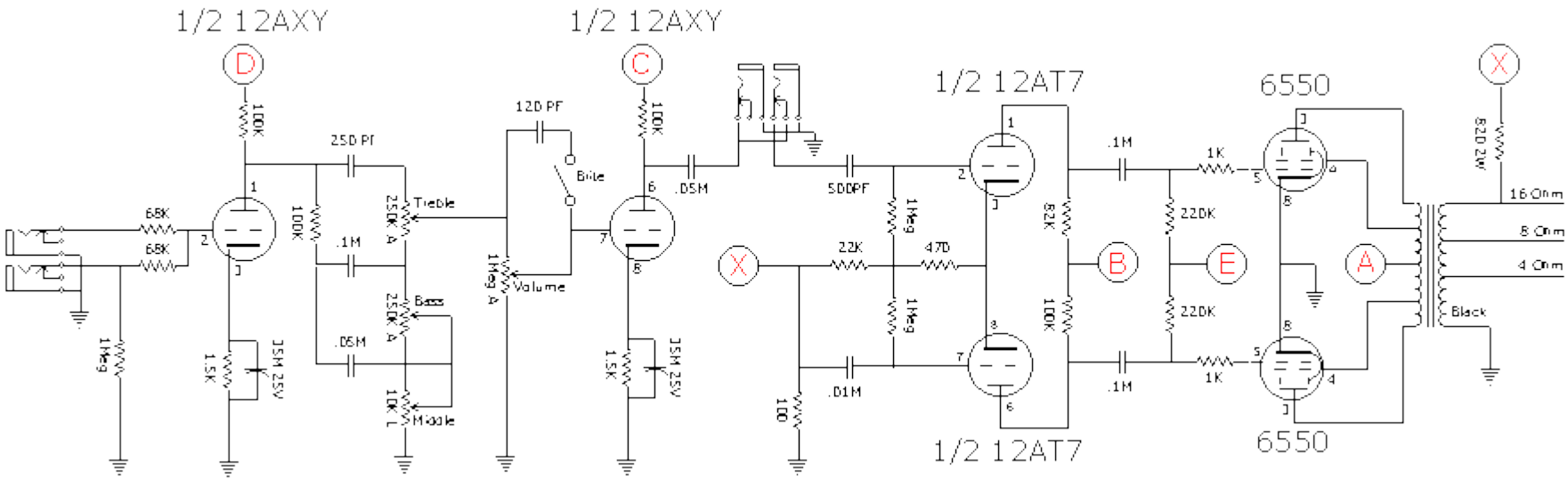
1/2 12AXY
1/2 12AXY
1/2 12AT7
1/2 12AT7
6550
6550
D
C
X
B
E
A
X
100K
250 Pf
68K
68K
100K
.1M
250K A
Treble
250K A
Bass
.05M
10K L
Middle
1Meg
1.5K
35M 25V
120 PF
Bite
1Meg A
Volume
100K
.05M
1Meg
1.5K
35M 25V
500PF
1Meg
1Meg
22K
47D
.01M
100
82K
100K
.1M
1K
22DK
22DK
.1M
1K
820 2W
16 Ohm
8 Ohm
4 Ohm
Black

West Grande

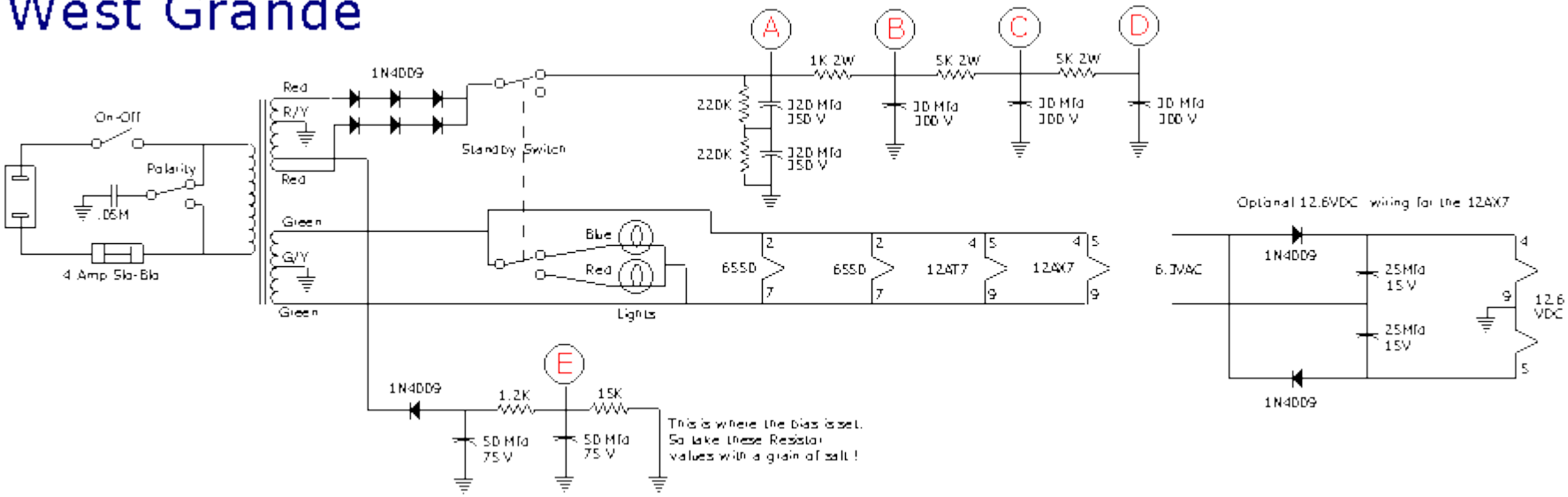
On-Off
Polarity
.05M
4 Amp Sla-Bla
Red
R/Y
Red
Green
G/Y
Green
1N4009
Stand by Switch
Blue
Red
Lights
A
B
C
D
1K 2W
5K 2W
5K 2W
22DK
22DK
320 Mfd 350 V
320 Mfd 350 V
30 Mfd 300 V
30 Mfd 300 V
30 Mfd 300 V
6550
6550
12AT7
12AX7
Optional 12.6VDC wiring for the 12AX7
6.3VAC
1N4009
25Mfd 15 V
25Mfd 15V
12.6 VDC
1N4009
E
1N4009
1.2K
15K
50 Mfd 75 V
50 Mfd 75 V
This is where the bias is set.
So take these Resistor
values with a grain of salt !