Avalon Power Supply

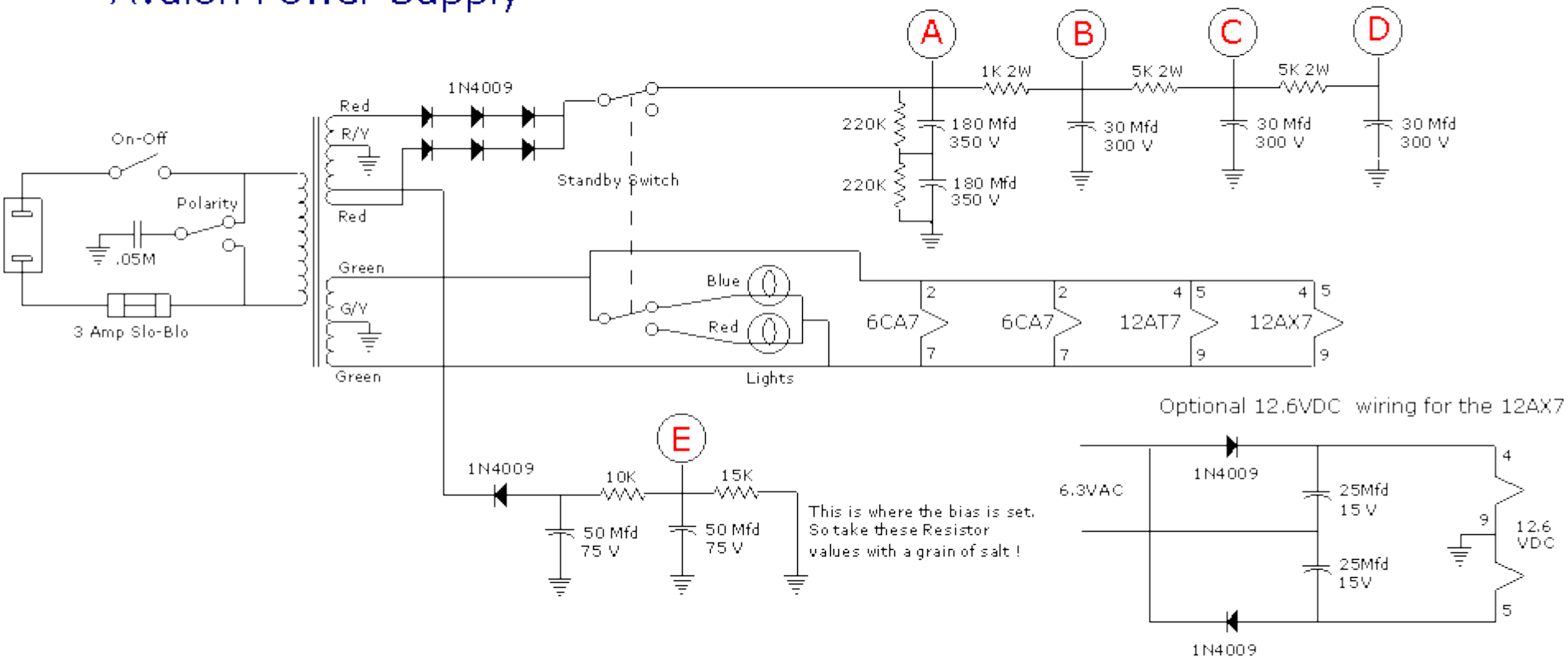

Optional 12.6VDC wiring for the 12AX7