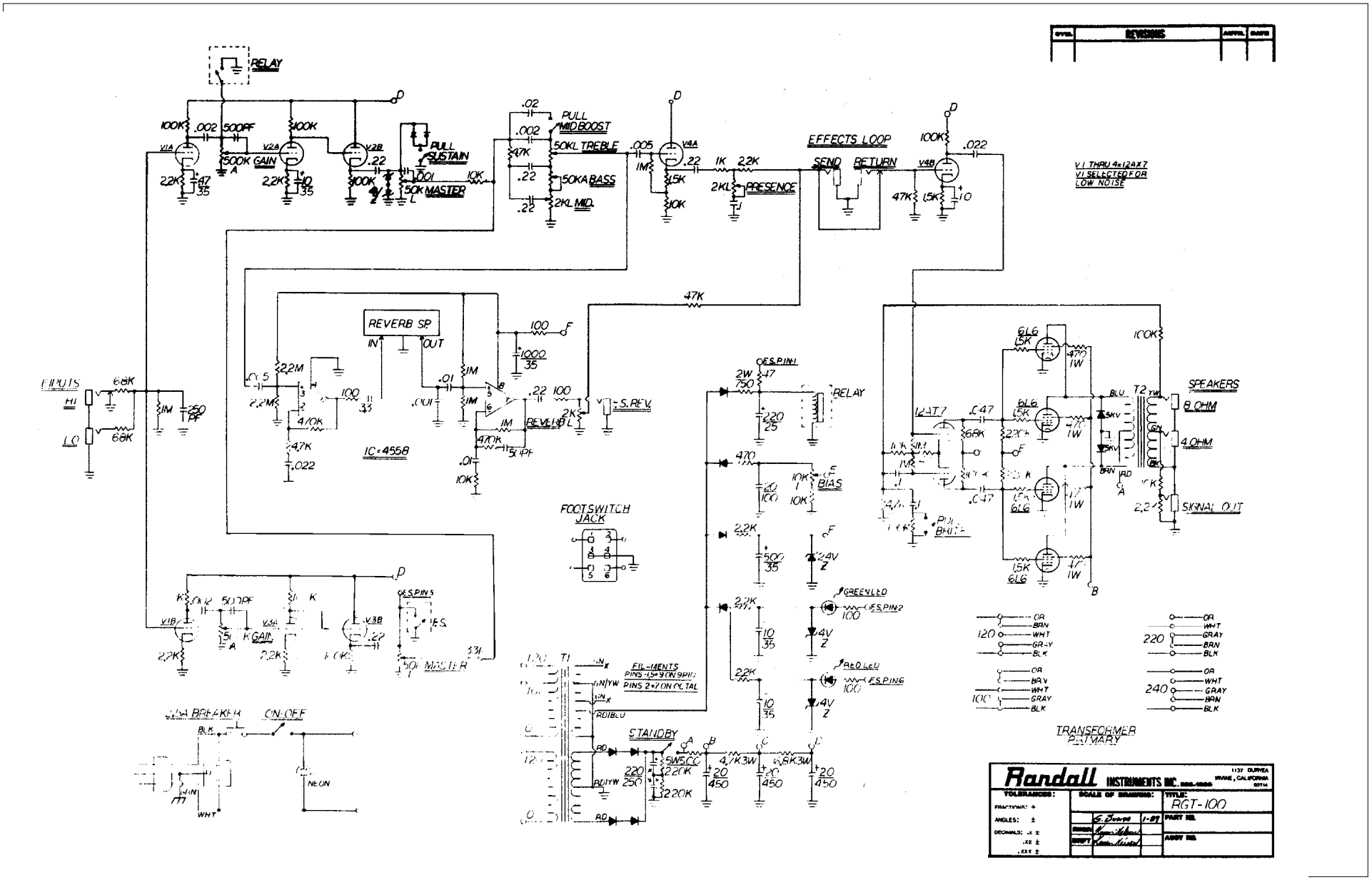
RELAY
PULL SUSTAIN
PULL MID BOOST
50KL TREBLE
50KA BASS
2KL MID.
MASTER
GAIN
EFFECTS LOOP
SEND
RETURN
PRESENCE
V1 THRU 4=12AX7
V1 SELECTED FOR LOW NOISE
REVERB SP.
IN
OUT
IC=4558
REVERB
S.REV.
FOOTSWITCH JACK
RELAY
BIAS
GREEN LED
RED LED
FIL-MENTS
STANDBY
SPEAKERS
8 OHM
4 OHM
SIGNAL OUT
TRANSFORMER PRIMARY
ON-OFF
NEON
Randall INSTRUMENTS INC.
RGT-100