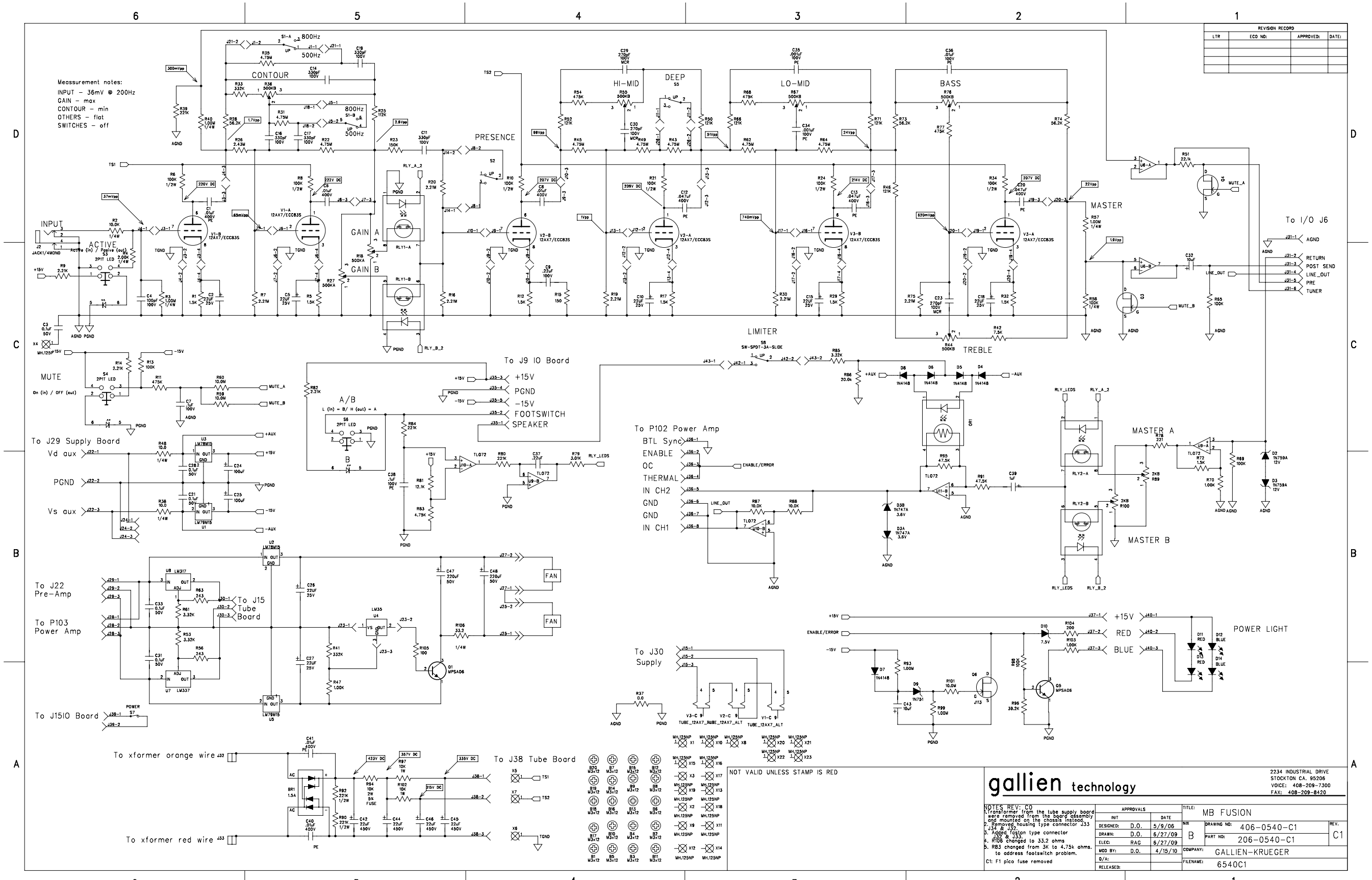

NOT VALID UNLESS STAMP IS RED

REVISION RECORD

LTR	ECO NO:	APPROVED:	DATE:

gallien technology

2234 INDUSTRIAL DRIVE
STOCKTON CA. 95206
VOICE: 408-209-7300
FAX: 408-209-8420

NOTES REV: C0
1. Transformer from the tube supply board were removed from the board assembly and mounted on the chassis instead.
2. Removed housing type connector J33 J34 & J32.
3. Added fusion type connector J32 & J33.
4. R106 changed to 33.2 ohms
5. R83 changed from 3K to 4.75k ohms. to address footswitch problem.
C1: F1 pico fuse removed

APPROVALS		
INIT		DATE
DESIGNED:	D.O.	5/9/06
DRAWN:	D.O.	6/27/09
ELEC:	RAG	6/27/09
MOD BY:	D.O.	4/15/10
Q/A:		
RELEASED:		

TITLE: MB FUSION

SIZE: B

DRAWING NO: 406-0540-C1

PART NO: 206-0540-C1

REV. C1

COMPANY: GALLIEN-KRUEGER

FILENAME: 6540C1

6540C1.sch-1 - Wed Mar 17 09:57:07 2010