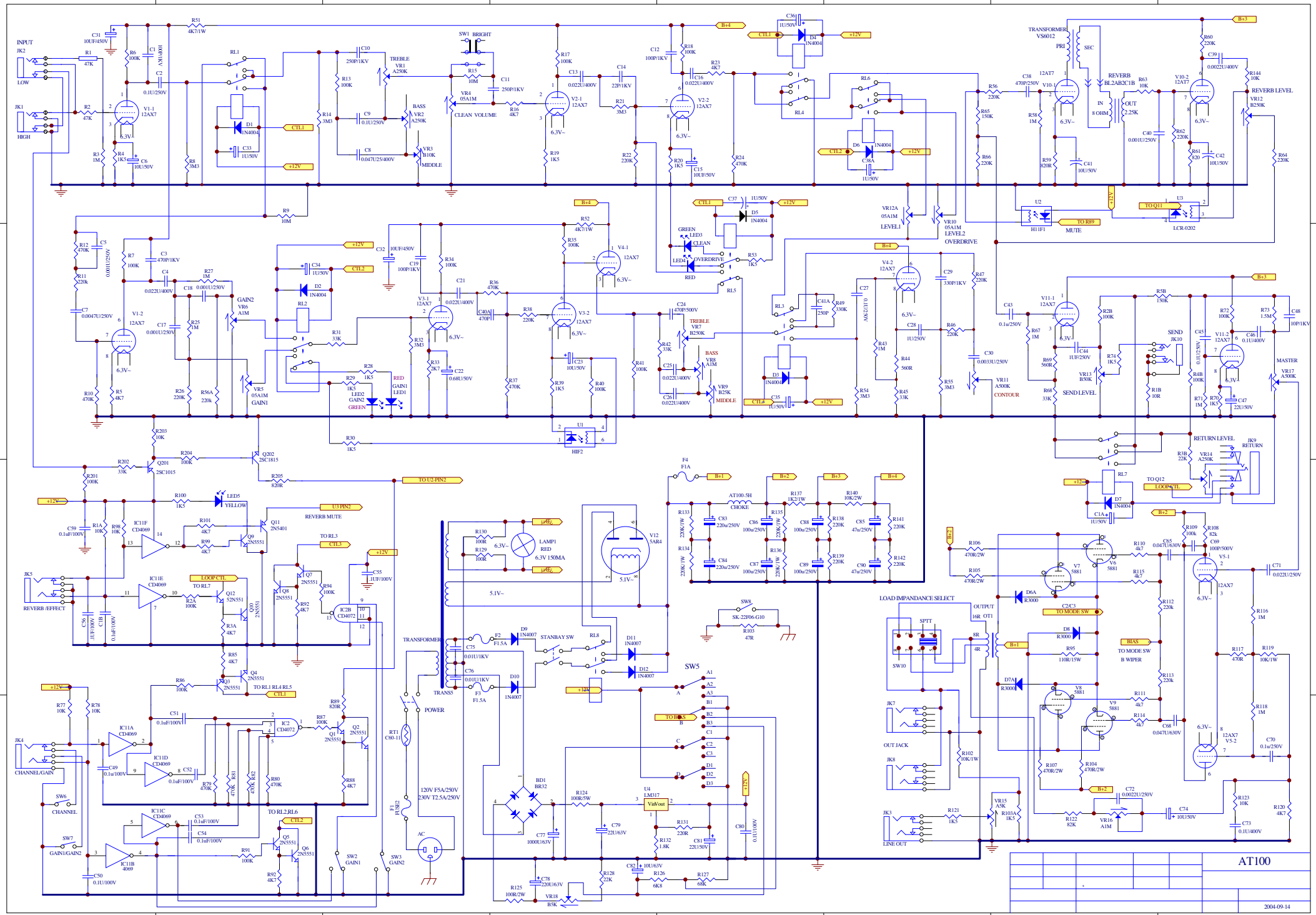
AT100
2004-09-14
INPUT
LOW
HIGH
TREBLE
BASS
MIDDLE
CLEAN VOLUME
BRIGHT
TRANSFORMER
VS6012
PRI
SEC
REVERB
BL2AB2C1B
REVERB LEVEL
OVERDRIVE
LEVEL1
LEVEL2
MUTE
CONTOUR
SEND
SEND LEVEL
MASTER
RETURN LEVEL
RETURN
REVERB /EFFECT
CHANNEL/GAIN
CHANNEL
GAIN1/GAIN2
GAIN1
GAIN2
REVERB MUTE
LOOP CTL
LAMP1
RED
6.3V 150MA
TRANS5
POWER
120V F5A/250V
230V T2.5A/250V
STANBAY SW
LOAD IMPANDANCE SELECT
OUTPUT
16R
8R
4R
OUT JACK
LINE OUT
BIAS
TO MODE SW
B WIPER
SW5
SW10
SW8
SK-22F06-G10
AC