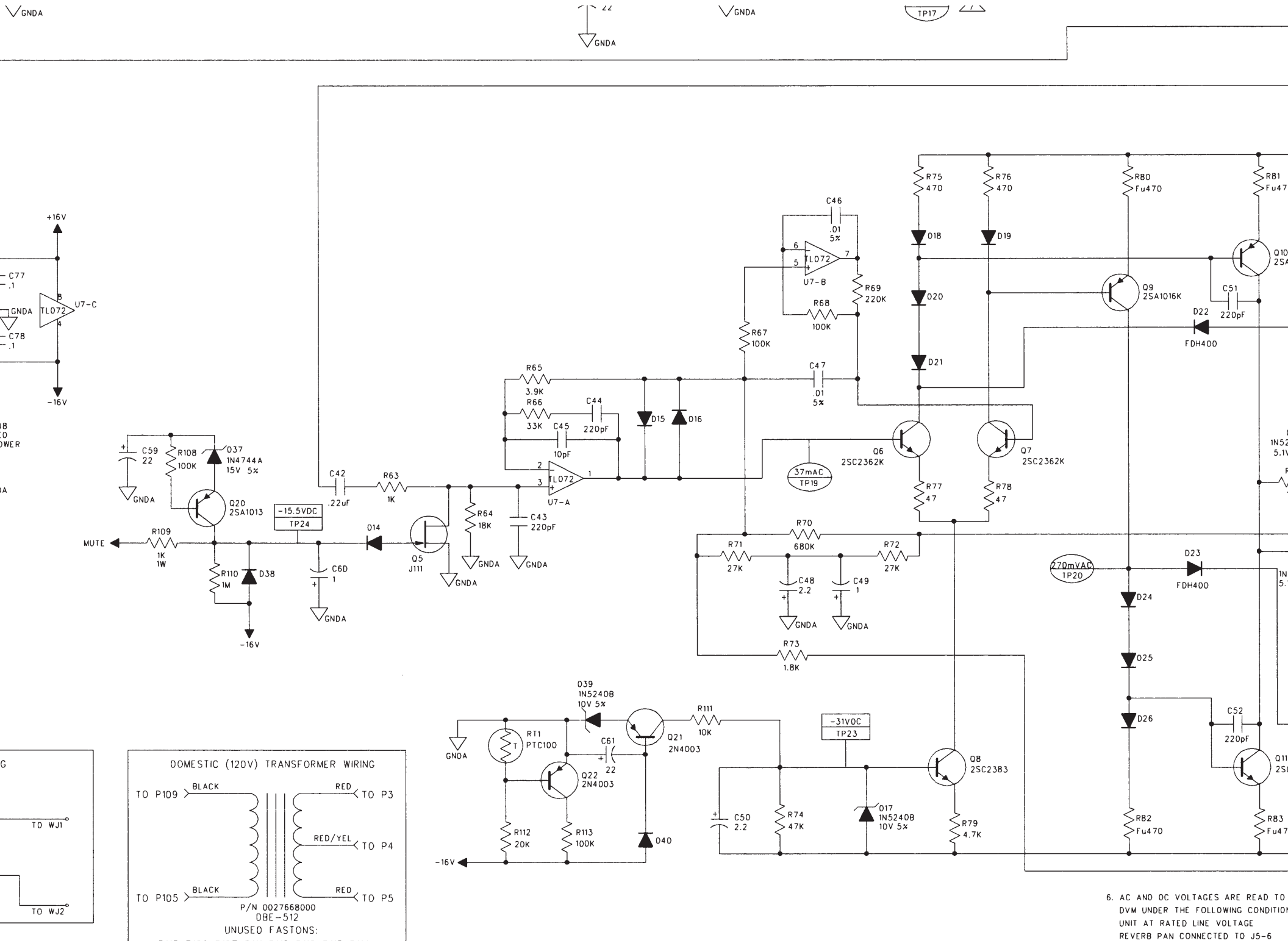

6. AC AND DC VOLTAGES ARE READ TO
DVM UNDER THE FOLLOWING CONDITION
UNIT AT RATED LINE VOLTAGE
REVERB PAN CONNECTED TO J5-6