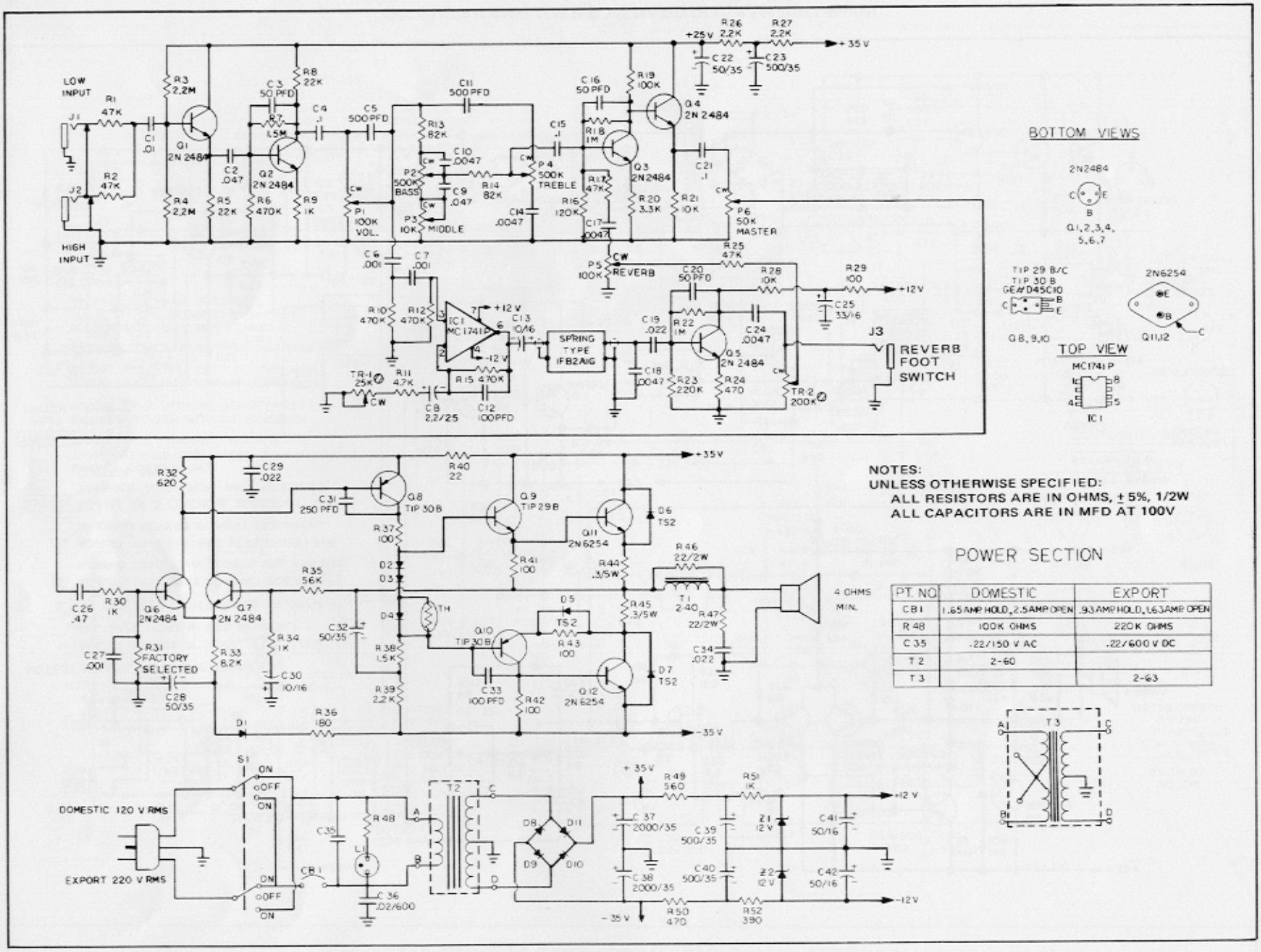

G50A GUITAR AMPLIFIER SCHEMATIC DIAGRAM