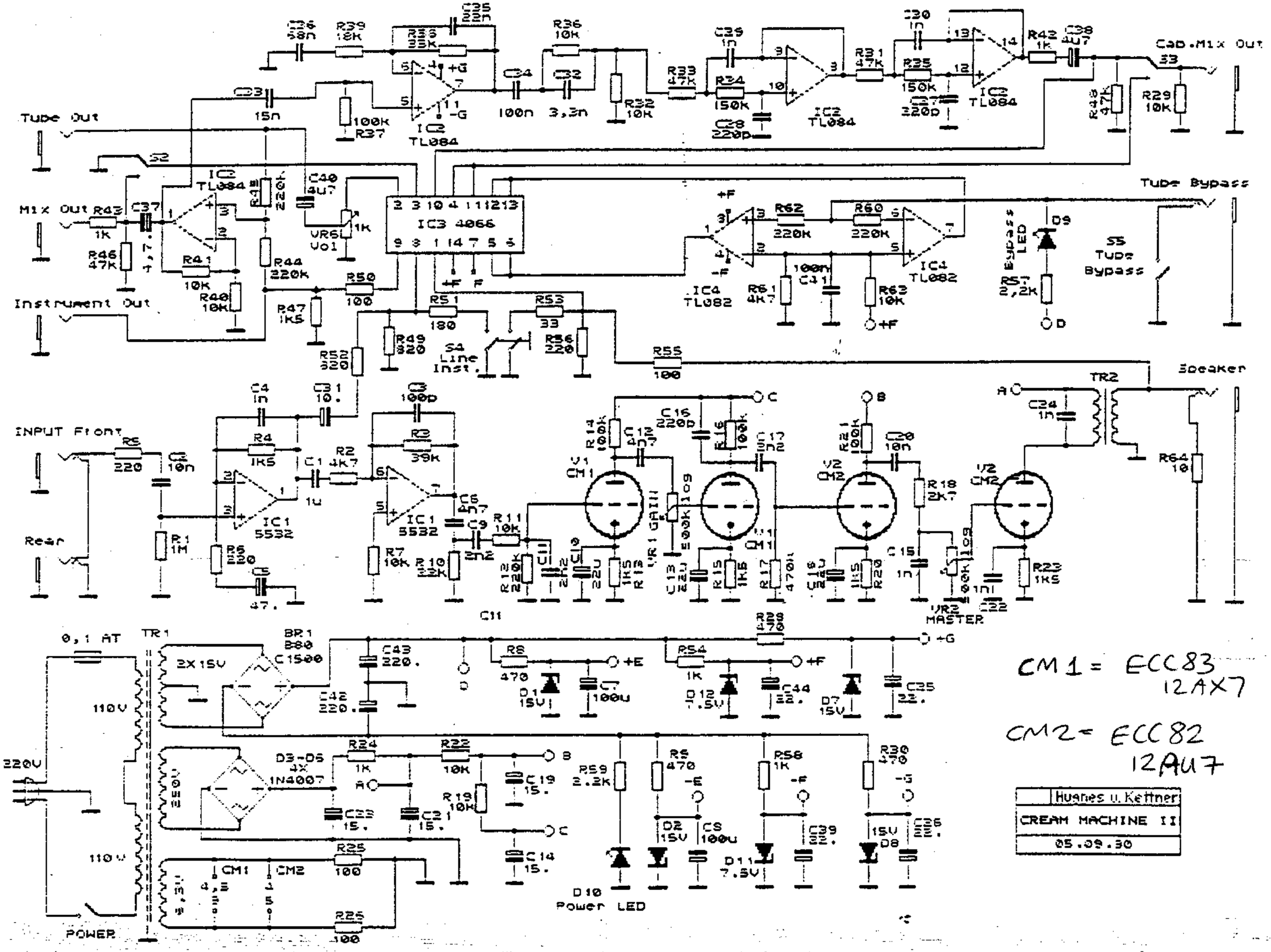
Tube Out
Mix Out
Instrument Out
INPUT Front
Rear
Cab.Mix Out
Tube Bypass
Speaker
IC3 4066
IC2 TL084
IC4 TL082
IC1 5532
S4 Line Inst.
S5 Tube Bypass
Bypass LED
VR6 Vol
VR1 GAIN
VR2 MASTER
TR1
TR2
BR1 B80 C1500
D3-D6 4X 1N4007
D10 Power LED
0,1 AT
220V
110V
POWER
CM1 = ECC83 12AX7
CM2 = ECC82 12AU7
Hughes u. Kettner
CREAM MACHINE II
05.09.30