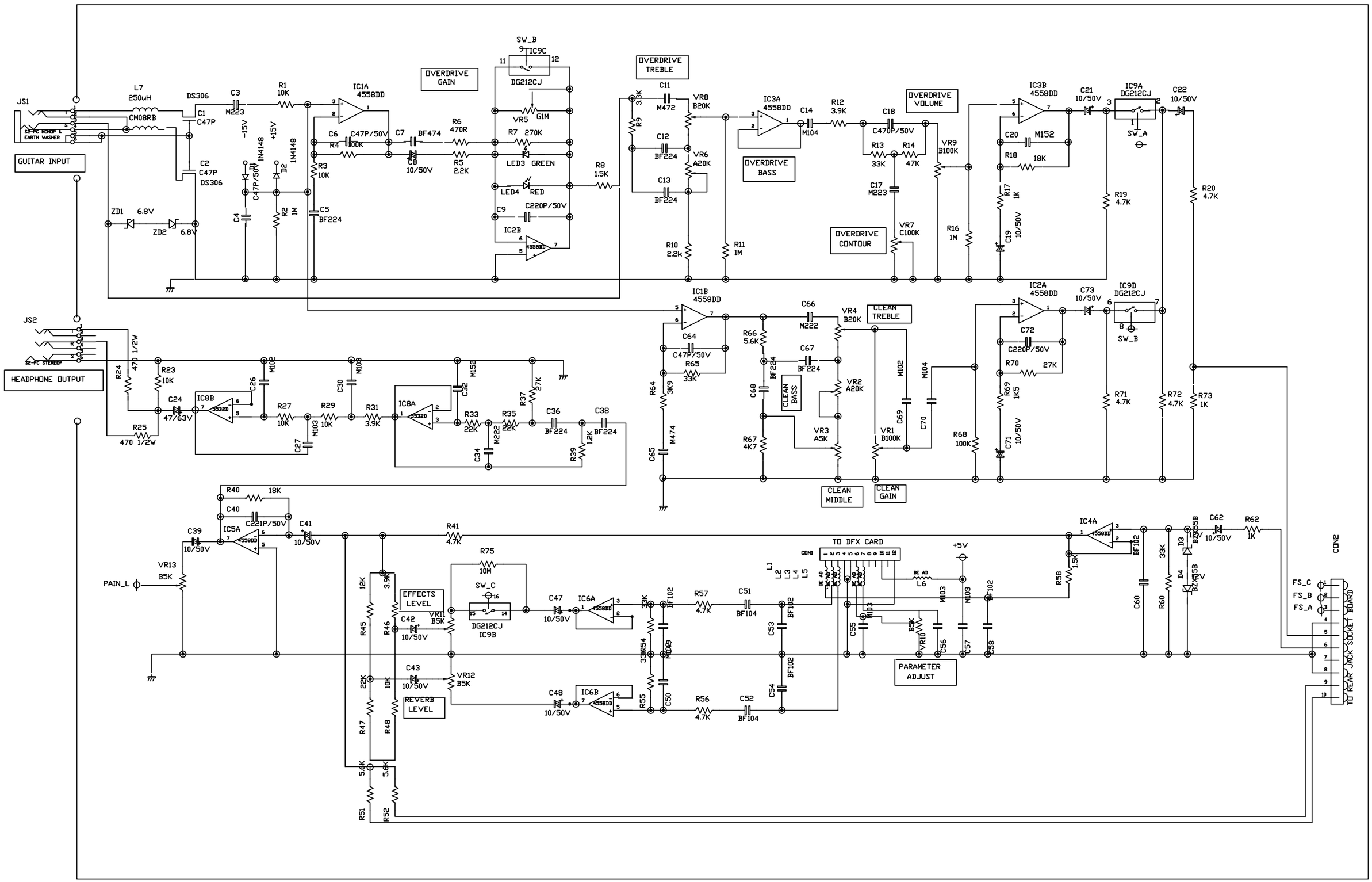

Title	MG-50DFX
Size A2	Document Number <Doc>
Rev	P_06
Date	Tuesday, July 23, 2002
Sheet	1 of 1

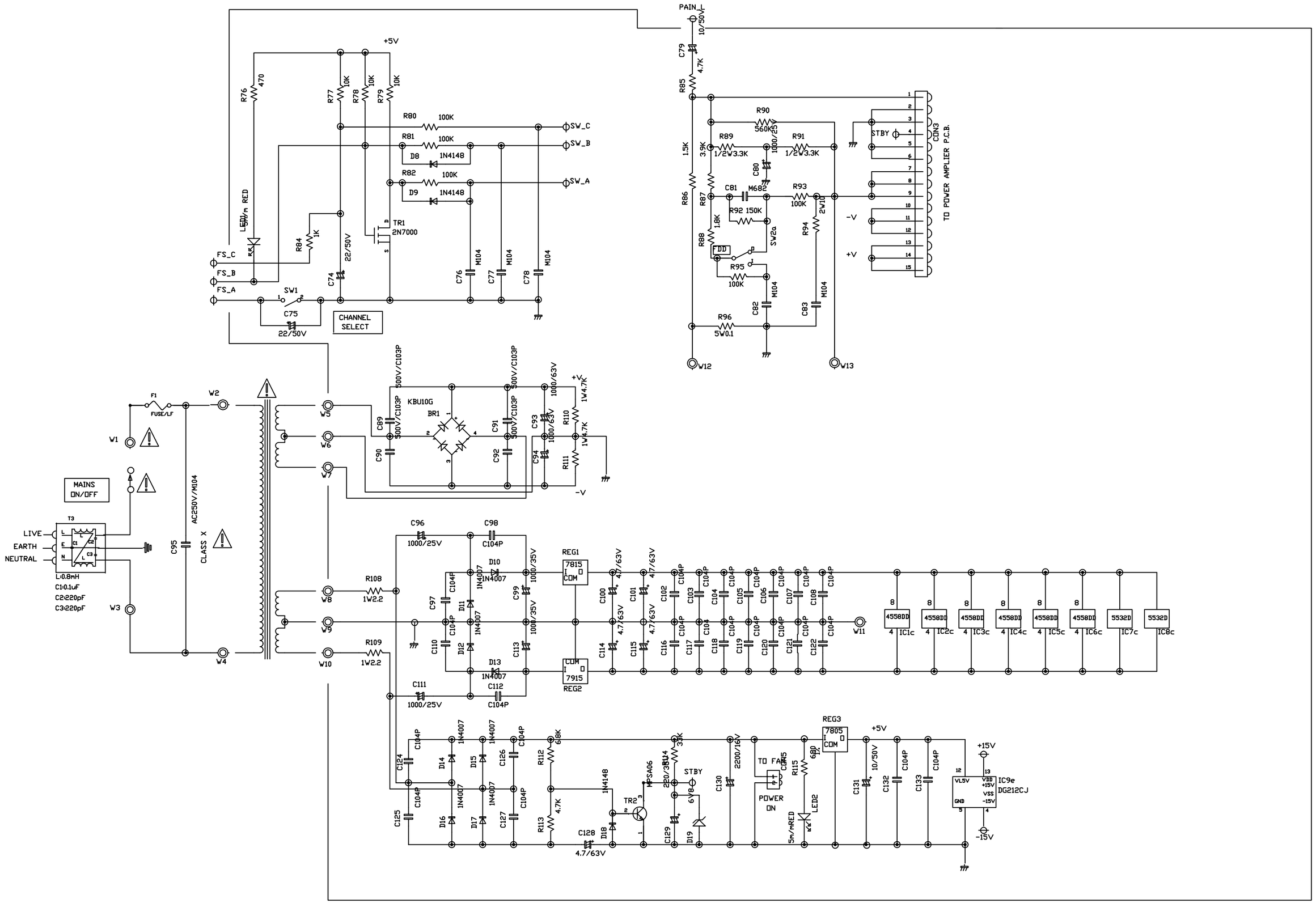

Title	MG-50DFX
Size A2	Document Number <Doc>
Rev	P_03
Date	Tuesday, July 23, 2002
Sheet	1 of 1

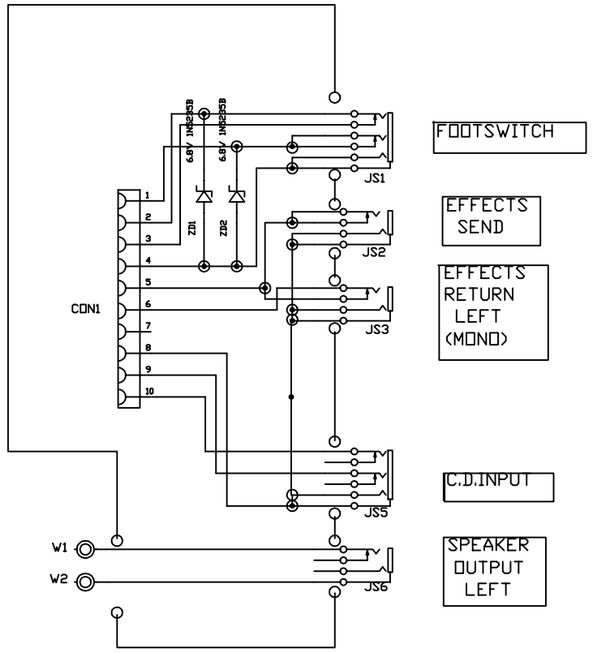

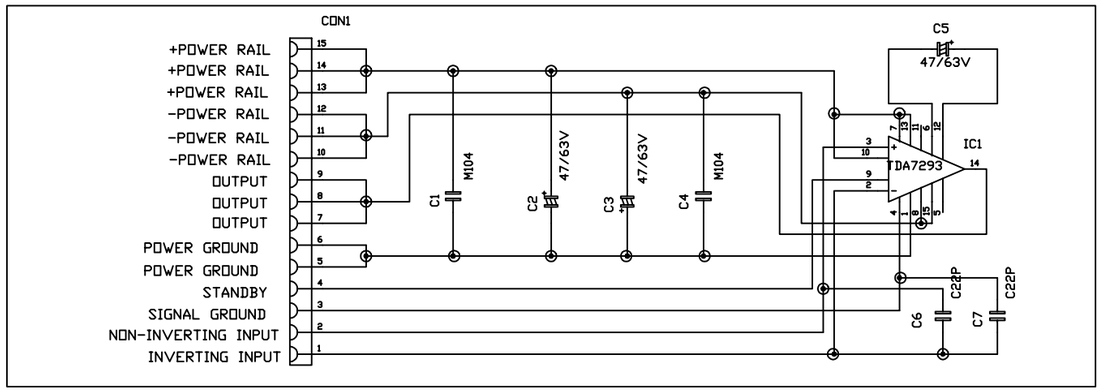

Title	MG-50DFX
Size A2	Document Number <Doc>
Rev	P_03
Date	Tuesday, July 23, 2002
Sheet	1 of 1