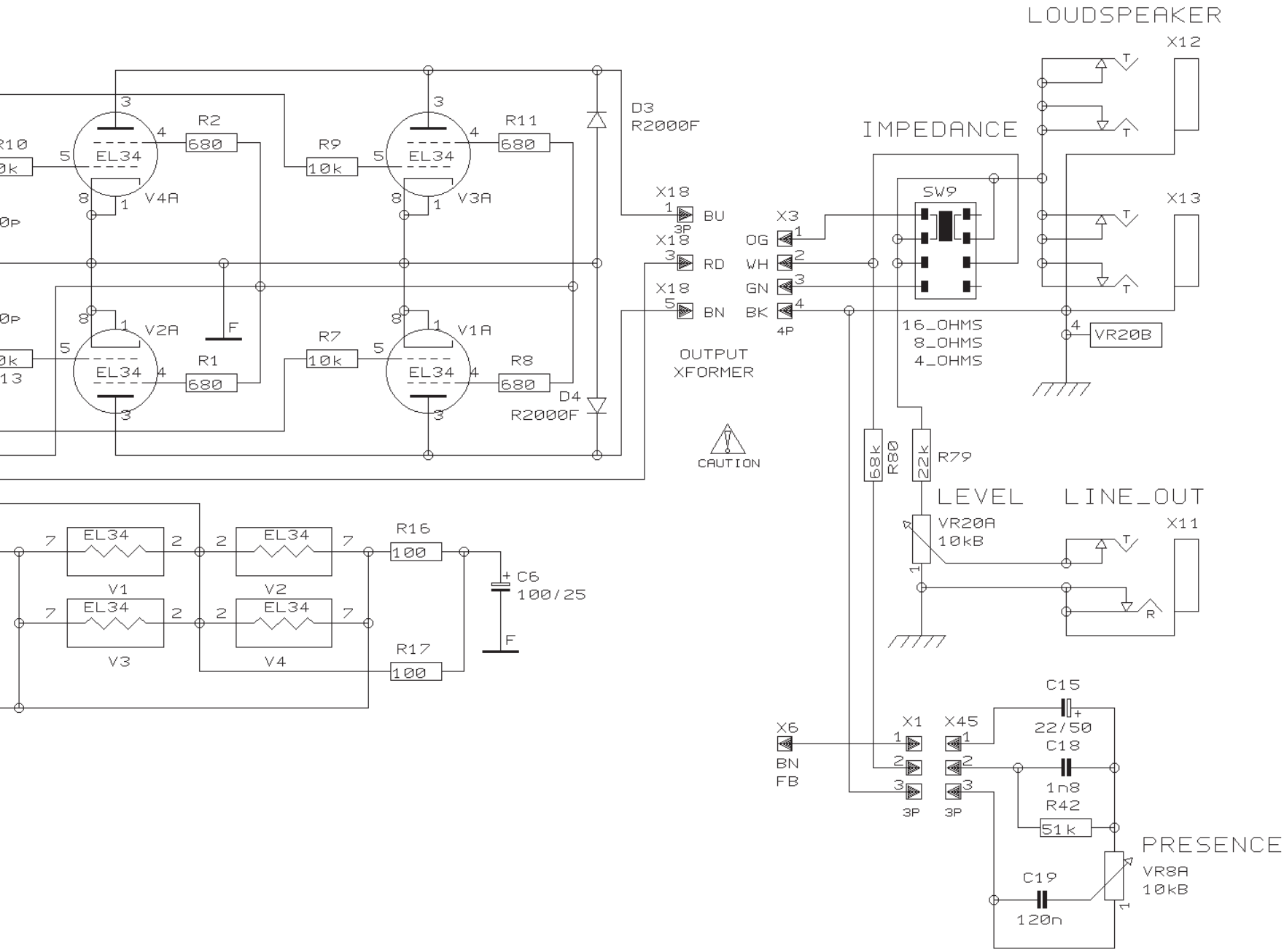
LOUDSPEAKER
X12
X13
IMPEDANCE
SW9
16_OHMS
8_OHMS
4_OHMS
VR20B
D3
R2000F
D4
R2000F
R2
680
R11
680
R9
10k
R7
10k
R1
680
R8
680
EL34
V4A
V3A
V2A
V1A
X18
BU
RD
BN
3P
OUTPUT
XFORMER
X3
OG
WH
GN
BK
4P
CAUTION
68k
R80
22k
R79
LEVEL
VR20A
10kB
LINE_OUT
X11
R
V1
V2
V3
V4
R16
100
R17
100
C6
100/25
F
X6
BN
FB
X1
X45
3P
C15
22/50
C18
1n8
R42
51k
PRESENCE
VR8A
10kB
C19
120n