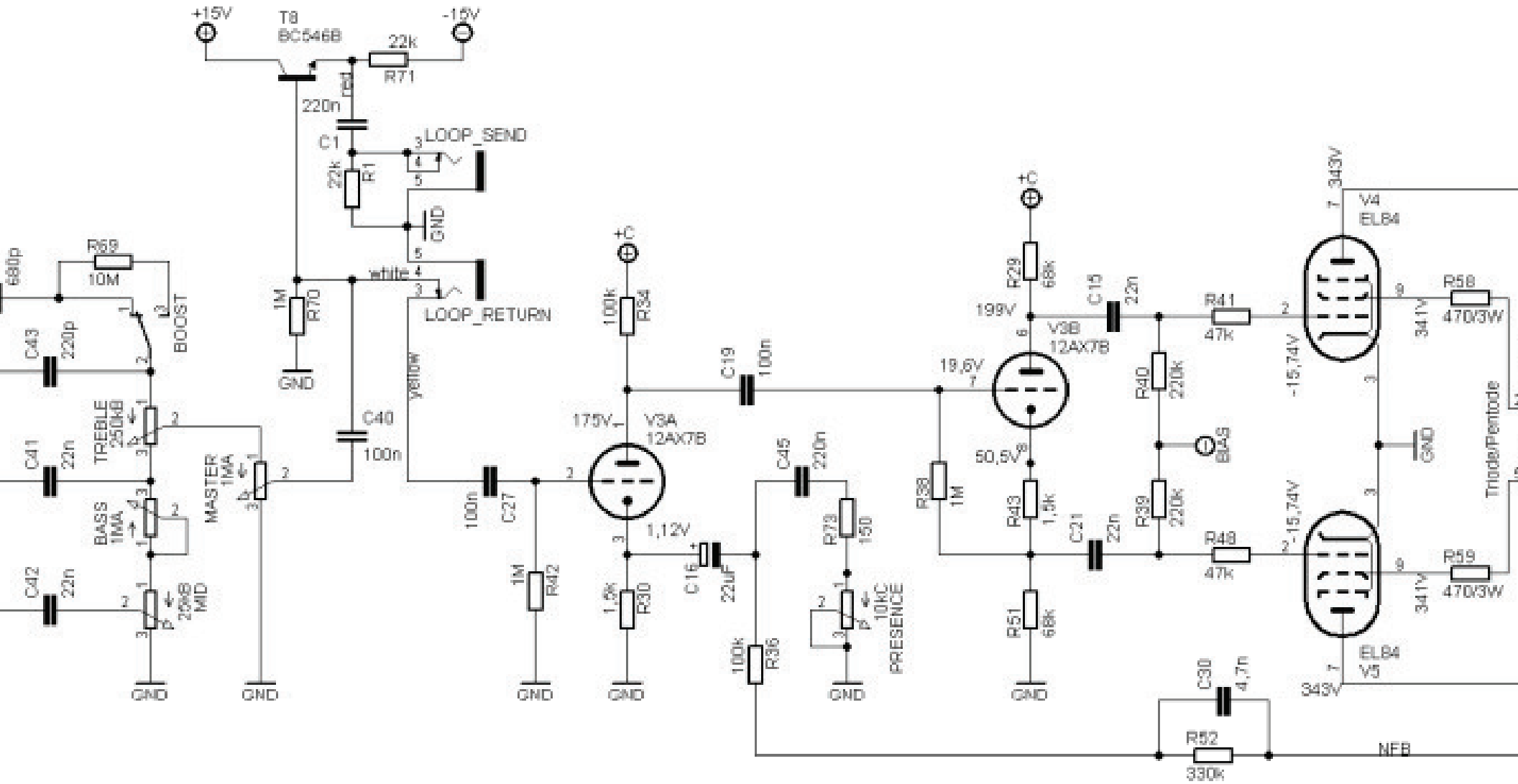
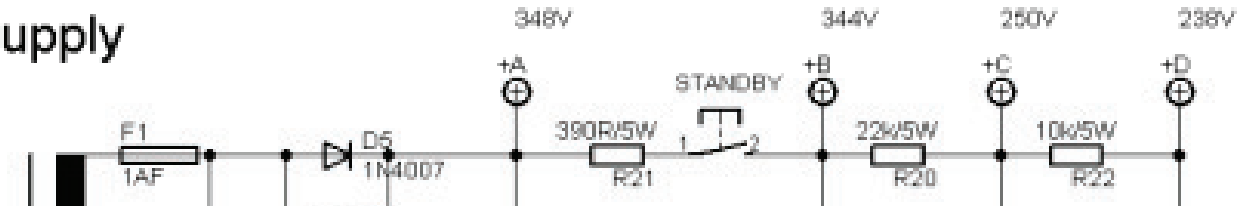
Power-Supply