Circuit Diagram (Main Board: 5/5)

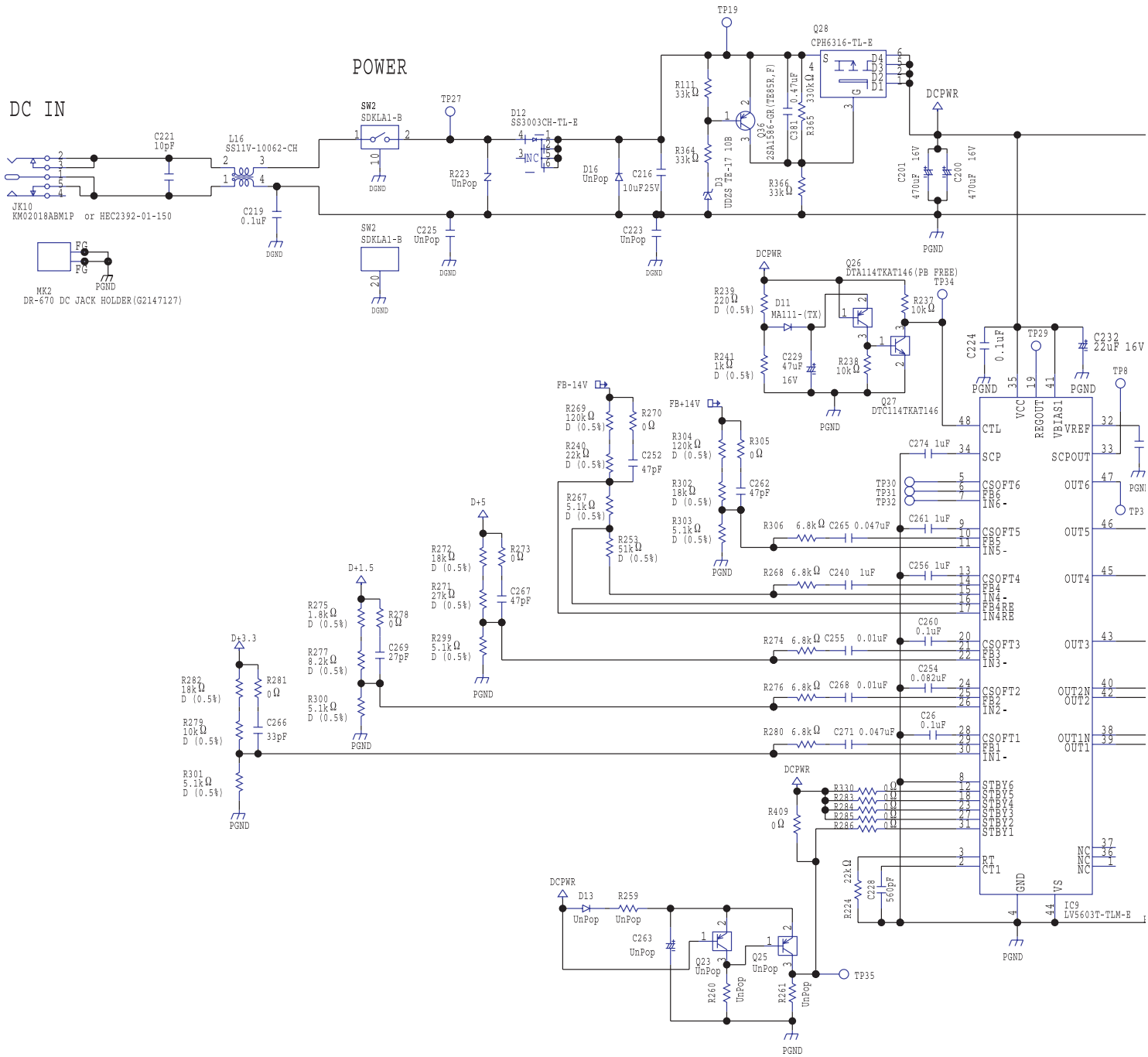

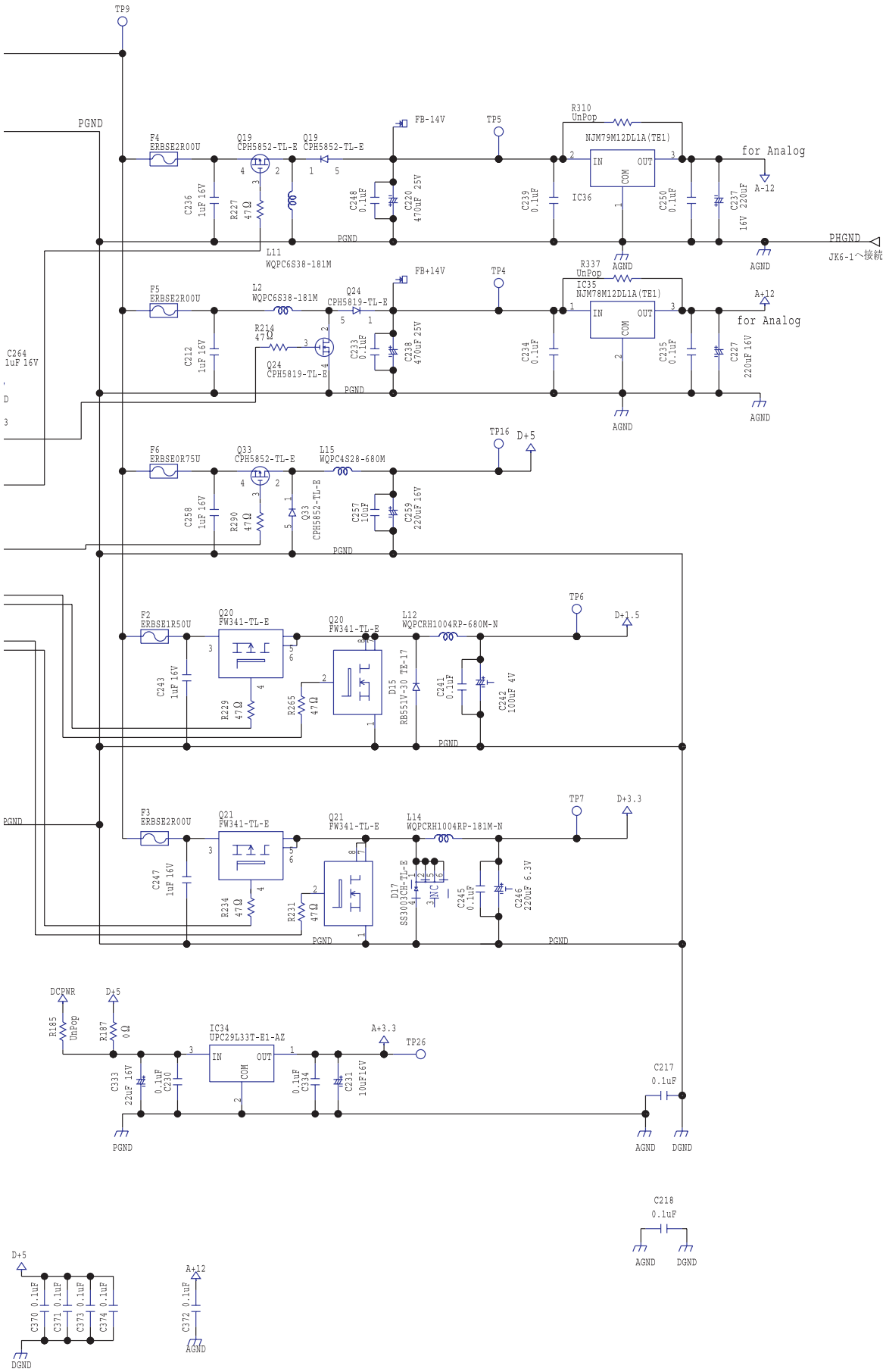
TP9
PGND
F4
ERBSE2R00U
Q19
CPH5852-TL-E
Q19
CPH5852-TL-E
FB-14V
TP5
R310
UnPop
NJM79M12DL1A(TE1)
IN
OUT
COM
for Analog
A-12
C236
1uF 16V
R227
47Ω
C248
0.1uF
C220
470uF 25V
C239
0.1uF
IC36
C250
0.1uF
C237
220uF
16V
PGND
L11
WQPC6S38-181M
AGND
AGND
PHGND
JK6-1へ接続
F5
ERBSE2R00U
L2
WQPC6S38-181M
Q24
CPH5819-TL-E
FB+14V
TP4
R337
UnPop
IC35
NJM78M12DL1A(TE1)
A+12
for Analog
C264
1uF 16V
C212
1uF 16V
R214
47Ω
Q24
CPH5819-TL-E
C233
0.1uF
C238
470uF 25V
C234
0.1uF
C235
0.1uF
C227
220uF 16V
PGND
AGND
AGND
TP16
D+5
F6
ERBSE0R75U
Q33
CPH5852-TL-E
L15
WQPC4S28-680M
C258
1uF 16V
R290
47Ω
Q33
CPH5852-TL-E
C257
10uF
C259
220uF 16V
PGND
TP6
D+1.5
F2
ERBSE1R50U
Q20
FW341-TL-E
Q20
FW341-TL-E
L12
WQPCRH1004RP-680M-N
C243
1uF 16V
R229
47Ω
R265
47Ω
D15
RB551V-30 TE-17
C241
0.1uF
C242
100uF 4V
PGND
TP7
D+3.3
F3
ERBSE2R00U
Q21
FW341-TL-E
Q21
FW341-TL-E
L14
WQPCRH1004RP-181M-N
C247
1uF 16V
R234
47Ω
R231
47Ω
D17
SS3003CH-TL-E
NC
C245
0.1uF
C246
220uF 6.3V
PGND
PGND
DCPWR
D+5
R185
UnPop
R187
0Ω
IC34
UPC29L33T-E1-AZ
A+3.3
TP26
C333
22uF 16V
C230
0.1uF
C334
0.1uF
C231
10uF16V
C217
0.1uF
PGND
AGND
DGND
C218
0.1uF
AGND
DGND
D+5
C370 0.1uF
C371 0.1uF
C373 0.1uF
C374 0.1uF
DGND
A+12
C372 0.1uF
AGND