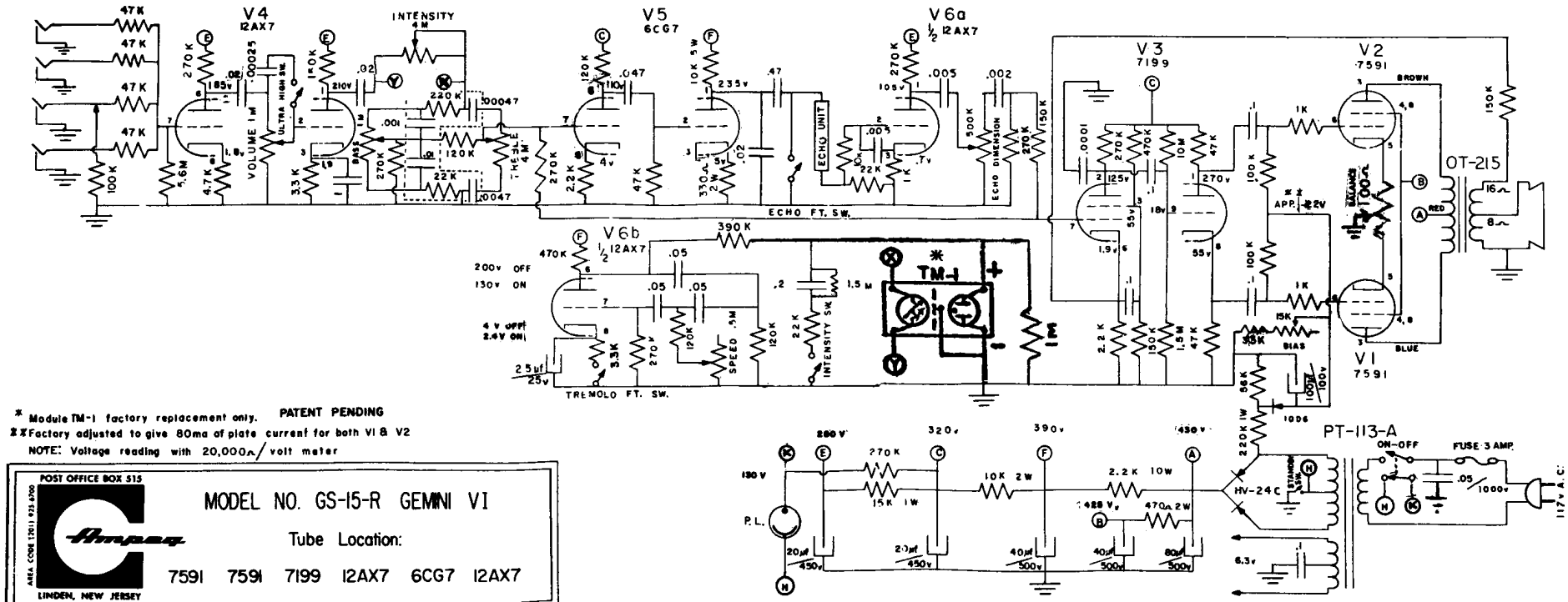

* Module TM-1 factory replacement only. PATENT PENDING

** Factory adjusted to give 80ma of plate current for both V1 & V2

NOTE: Voltage reading with 20,000Ω/volt meter

POST OFFICE BOX 515

AREA CODE 12011 925 6700

LINDEN, NEW JERSEY

MODEL NO. GS-15-R GEMINI VI

Tube Location:

7591 7591 7199 12AX7 6CG7 12AX7