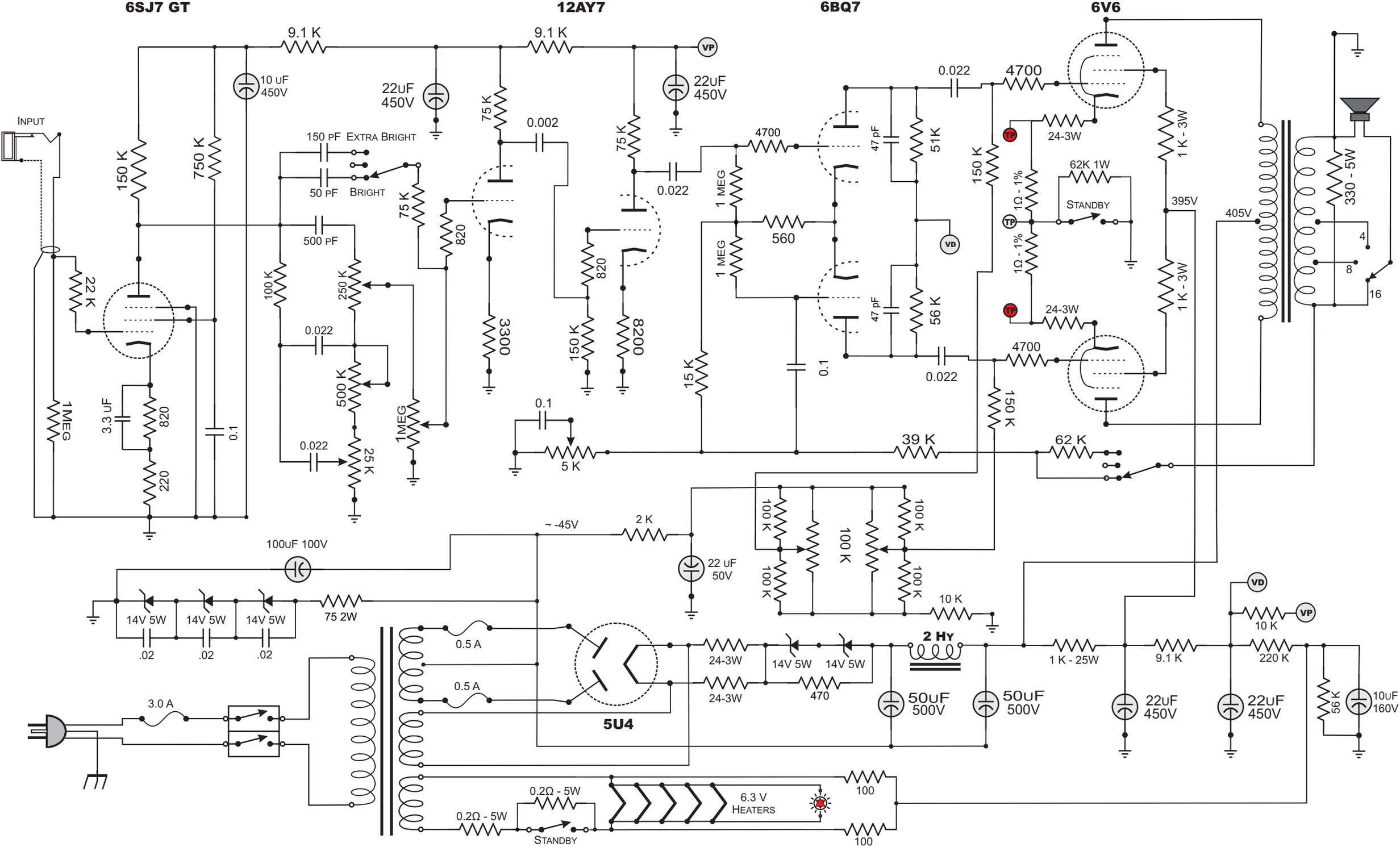
6SJ7 GT
12AY7
6BQ7
6V6
INPUT
9.1 K
9.1 K
VP
10 uF 450V
22uF 450V
22uF 450V
150 K
750 K
150 pF EXTRA BRIGHT
50 pF BRIGHT
500 pF
75 K
0.002
75 K
0.022
75 K
820
3300
150 K
820
8200
1 MEG
1 MEG
4700
560
15 K
0.1
0.022
4700
47 pF
51K
47 pF
56 K
0.022
150 K
1Ω - 1%
1Ω - 1%
24-3W
24-3W
62K 1W
STANDBY
TP
TP
TP
VD
395V
405V
1 K - 3W
1 K - 3W
330 - 5W
4
8
16
4700
150 K
39 K
62 K
22 K
1MEG
3.3 uF
820
220
0.1
100 K
250 K
0.022
500 K
0.022
25 K
1MEG
0.1
5 K
100 K
100 K
100 K
100 K
100 K
10 K
~ -45V
2 K
22 uF 50V
100uF 100V
14V 5W
14V 5W
14V 5W
75 2W
.02
.02
.02
0.5 A
0.5 A
24-3W
24-3W
14V 5W
14V 5W
470
2 HY
1 K - 25W
9.1 K
10 K
220 K
VD
VP
50uF 500V
50uF 500V
22uF 450V
22uF 450V
56 K
10uF 160V
5U4
3.0 A
0.2Ω - 5W
0.2Ω - 5W
STANDBY
6.3 V HEATERS
100
100