REVISION RECORD			
LTR	ECO NO:	APPROVED:	DATE:

FRONT

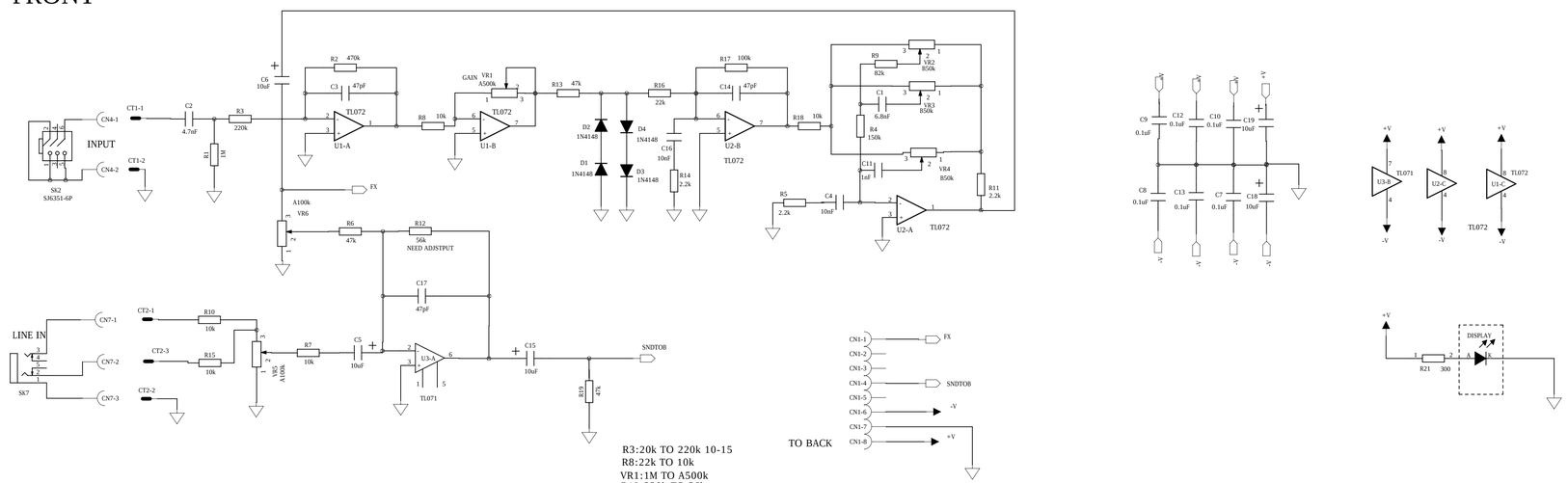

BACK

Remove D17 18(10-18)
Change R80 from 47K to 22K
Only connect Pins 8 (GNDS) and 10 (IN -)

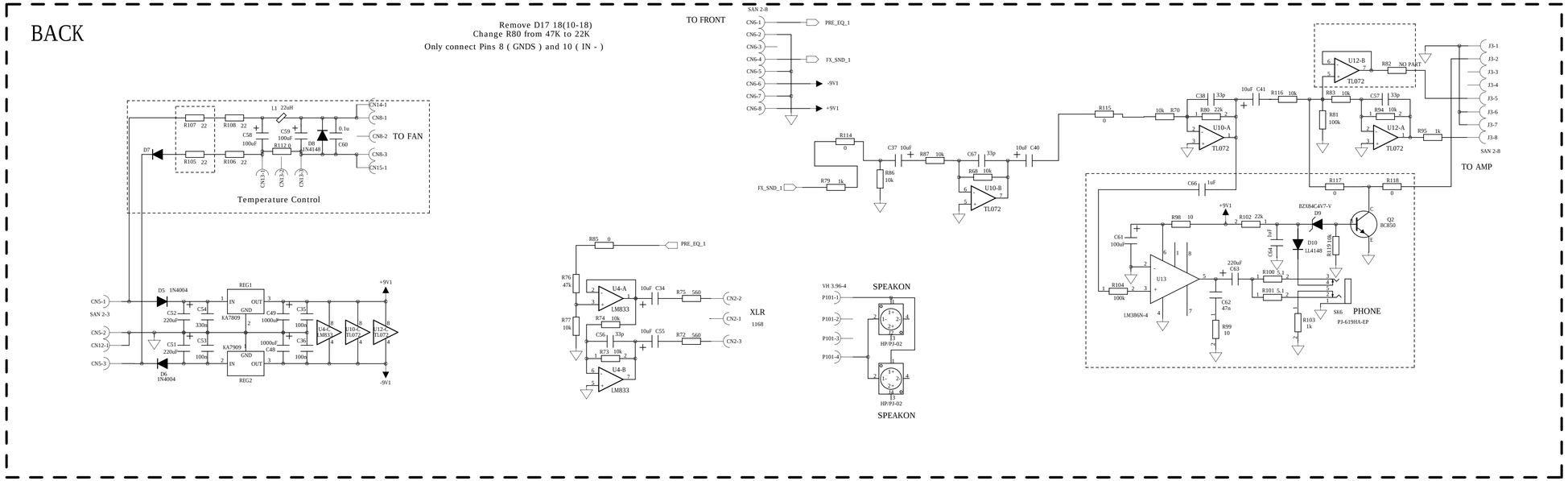

COMPANY:	ASHDOWN				
TITLE:	MiBASS V2.0				
DRAWN: <Drawn By>	DATED: <Drawn Date>	CODE: <Code>	SIZE: D	DRAWING NO: <Drawing Number>	REV: <Revision>
CHECKED: <Checked By>	DATED: <Checked Date>				
QUALITY CONTROL: <QC By>	DATED: <QC Date>				
RELEASED: <Released By>	DATED: <Release Date>	SCALE: <Scale>		SHEET: 1 OF 1	