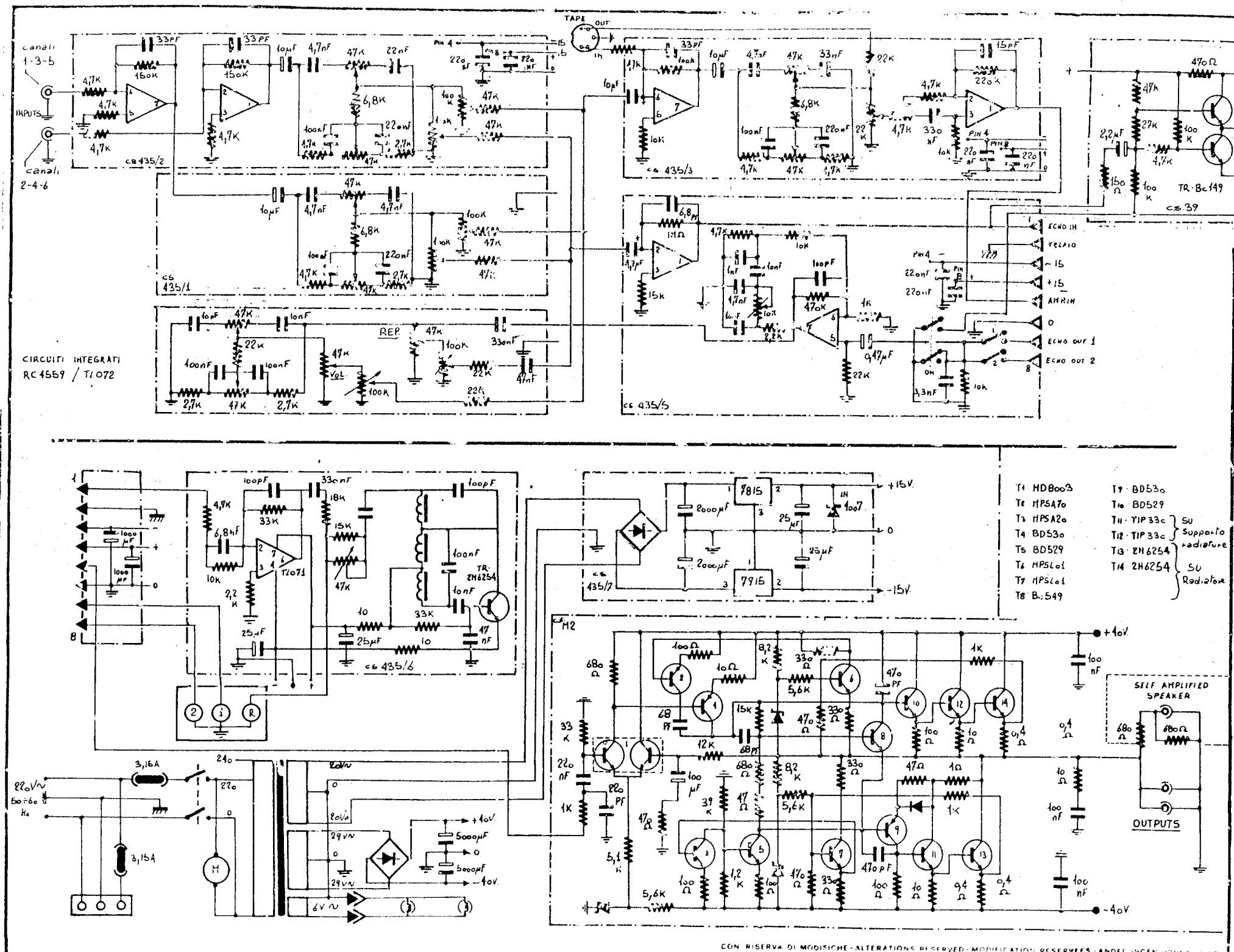
canali 1-3-5
INPUTS
canali 2-4-6
cs 435/2
cs 435/1
cs 435/3
cs 435/5
cs 39
cs 435/7
cs 435/6
M2
TAPE OUT
IN
REP.
VOL.
ECHO IN
TELAIO
-15
+15
AMP IN
0
ECHO OUT 1
ECHO OUT 2
TR. BC149
TR. 2N6254
TL071
7815
7915
CIRCUITI INTEGRATI
RC4559 / TL072
T1 MD8003
T2 MPSA70
T3 MPSA20
T4 BD530
T5 BD529
T6 MPSL01
T7 MPSL01
T8 BC549
T9 BD530
T10 BD529
T11 TIP33c
T12 TIP33c
T13 2N6254
T14 2N6254
SU Supporto radiatore
SU Radiatore
SELF AMPLIFIED SPEAKER
OUTPUTS
220V~ 50÷60 Hz
3,15A
3,15A
+40V
-40V
OGGETTO Mod. 453s
ARCHIVIO Nº 4
DATA 1 - 1980
BOLOGNA (ITALY)
Montarbo
ELETTRONICA SRL
CON RISERVA DI MODISICHE - ALTERATIONS RESERVED - MODIFICATION RESERVEES - ANDERUNGEN