REVISION RECORD			
LTR	ECO NO:	APPROVED:	DATE:
A	RELEASED		1-21-84
A1	UPDATED PER RED BOOK		7-19-84

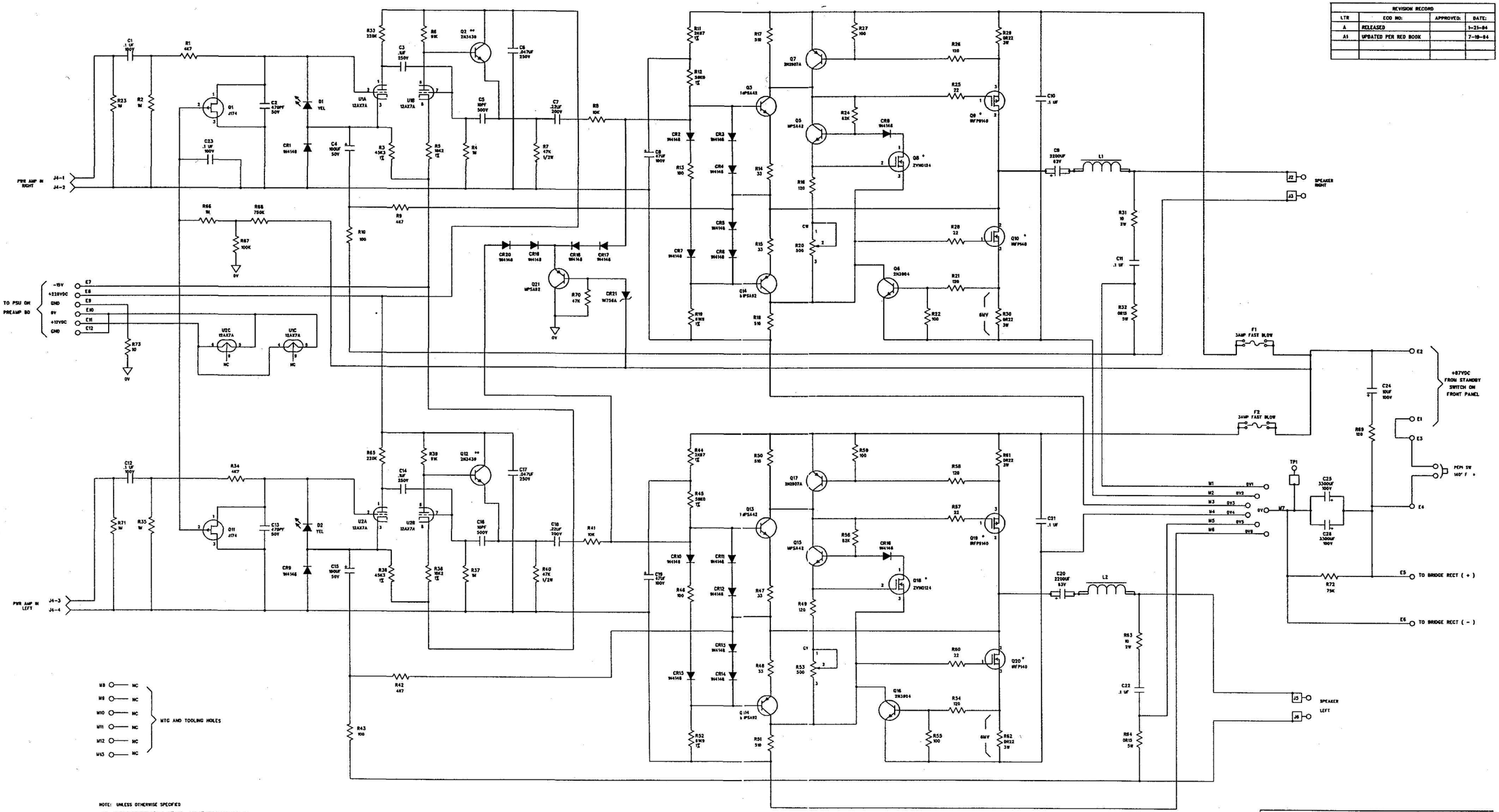

NOTE: UNLESS OTHERWISE SPECIFIED

1. RESISTORS ARE 1/4 W, 5%, CF. ALL 1% RESISTORS ARE MF.
2. (*) INDICATES PART MOUNTED TO HEATSINK.
3. (**) INDICATES A SNAP-ON HEATSINK.
4. THERMALLY COUPLED COMPONENTS:
   Q3 TO CR2, Q5 TO CR8, Q4 TO CR7,
   Q13 TO CR10, Q15 TO CR16, Q14 TO CR15.

DEPOT http://www.adadepot.com

COMPANY:	ADA INC.		
TITLE:	SCHEMATIC 2X12 COMBO POWER AMPS		
DRAWN: RON FARAR	DATED: 1-23-84	CODE:	SIZE: D
CHECKED:	DATED:	DRAWING NO: 893	REV: A1
QUALITY CONTROL:	DATED:		
RELEASED:	DATED:	SCALE: 1 : 1	SHEET: 1 OF 1