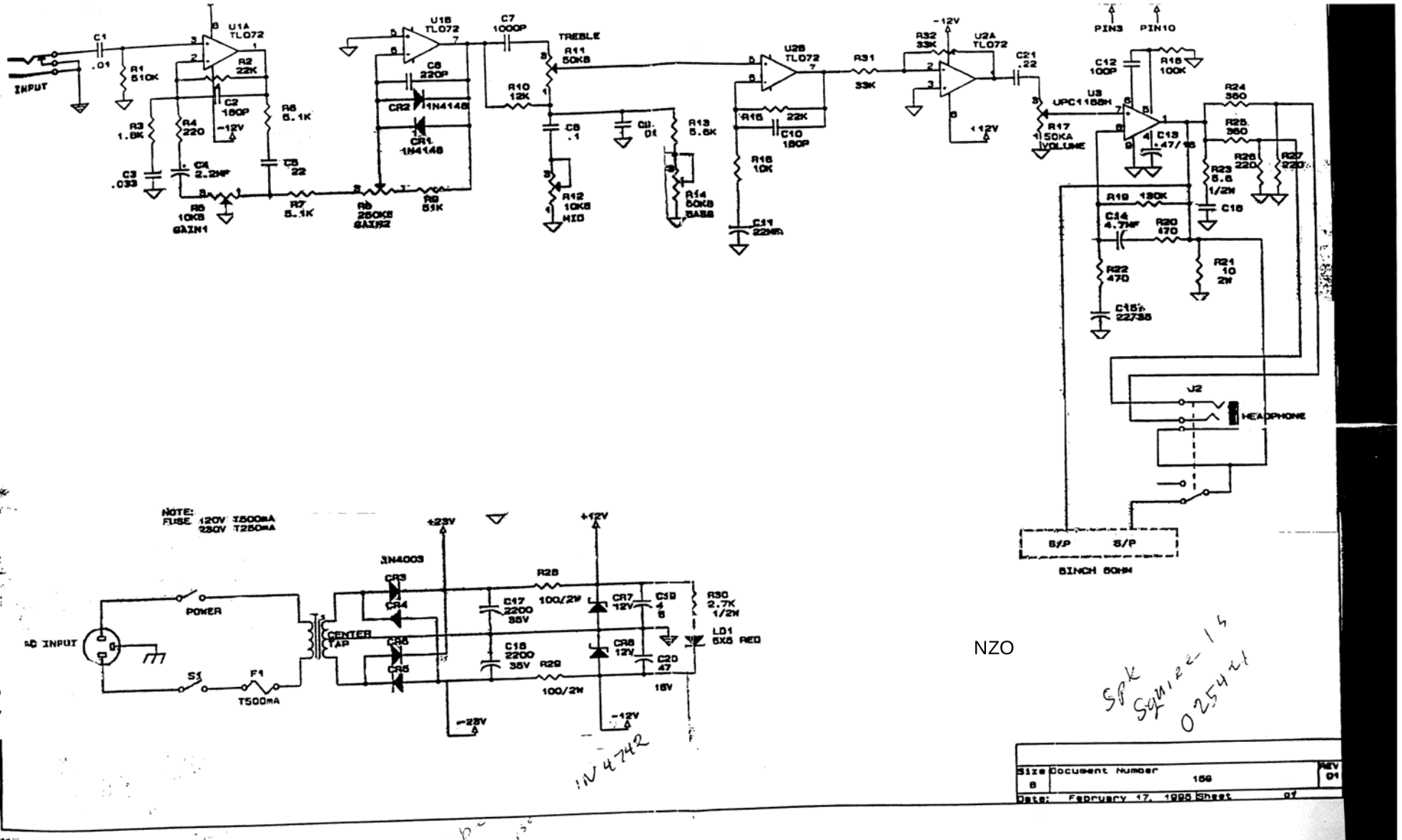
INPUT
C1 .01
R1 510K
U1A TL072
R2 22K
C2 180P
R3 1.8K
R4 220
-12V
R6 5.1K
C3 .033
C4 2.2MF
C5 22
R5 10KB GAIN1
R7 5.1K
U1B TL072
C6 220P
CR2 1N4148
CR1 1N4148
R8 250KB GAIN2
R9 51K
C7 1000P
TREBLE
R11 50KB
R10 12K
C8 .1
R12 10KB MID
C9 .01
R13 5.6K
R14 50KB BASS
U2B TL072
R15 22K
C10 180P
R16 10K
C11 22MF
R31 33K
R32 33K
U2A TL072
-12V
+12V
C21 .22
R17 50KA VOLUME
PIN3
PIN10
C12 100P
R18 100K
U3 UPC1158H
C13 47/16
R24 360
R25 360
R26 220
R27 220
R23 5.6 1/2W
C16
R19 130K
C14 4.7MF
R20 470
R21 10 2W
R22 470
C15 22735
J2
HEADPHONE
S/P
S/P
BINCH 60HM
NOTE:
FUSE 120V T500mA
230V T250mA
AC INPUT
POWER
S1
F1
T500mA
CENTER TAP
1N4003
CR3
CR4
CR6
CR5
+23V
-23V
C17 2200 35V
C18 2200 35V
R28 100/2W
R29 100/2W
+12V
-12V
CR7 12V
CR8 12V
C19 4 6
C20 47 16V
R30 2.7K 1/2W
LD1 5X5 RED
NZO
Spk Squire 15
025421
1N4742
Size B
Document Number 159
REV 01
Date: February 17, 1995
Sheet of