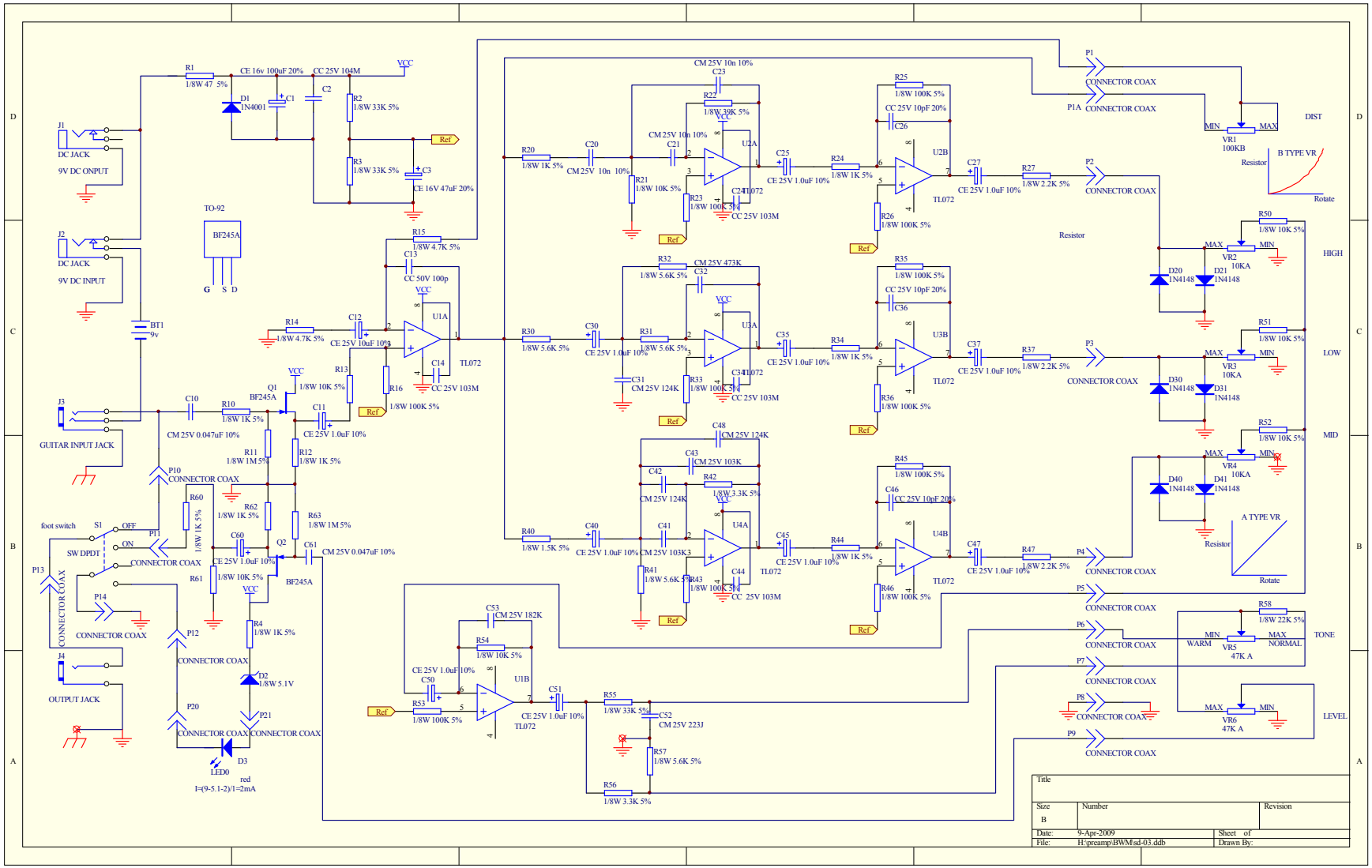
J1
DC JACK
9V DC ONPUT
J2
DC JACK
9V DC INPUT
BT1
9v
J3
GUITAR INPUT JACK
J4
OUTPUT JACK
R1
1/8W 47 5%
CE 16v 100uF 20%
CC 25V 104M
VCC
D1
1N4001
C1
C2
R2
1/8W 33K 5%
R3
1/8W 33K 5%
C3
CE 16V 47uF 20%
Ref
TO-92
BF245A
G S D
R15
1/8W 4.7K 5%
C13
CC 50V 100p
R14
1/8W 4.7K 5%
C12
CE 25V 10uF 10%
U1A
TL072
C14
CC 25V 103M
R16
1/8W 100K 5%
R13
1/8W 10K 5%
Q1
BF245A
C10
CM 25V 0.047uF 10%
R10
1/8W 1K 5%
C11
CE 25V 1.0uF 10%
R11
1/8W 1M 5%
R12
1/8W 1K 5%
P10
CONNECTOR COAX
R60
1/8W 1K 5%
R62
1/8W 1K 5%
R63
1/8W 1M 5%
C60
CE 25V 1.0uF 10%
Q2
BF245A
C61
CM 25V 0.047uF 10%
foot switch
S1
OFF
ON
SW DPDT
P11
CONNECTOR COAX
R61
1/8W 10K 5%
P13
CONNECTOR COAX
P14
CONNECTOR COAX
P12
CONNECTOR COAX
R4
1/8W 1K 5%
D2
1/8W 5.1V
P20
CONNECTOR COAX
P21
CONNECTOR COAX
D3
LED0
red
I=(9-5.1-2)/1=2mA
R20
1/8W 1K 5%
C20
CM 25V 10n 10%
C23
CM 25V 10n 10%
R22
1/8W 39K 5%
C21
CM 25V 10n 10%
R21
1/8W 10K 5%
R23
1/8W 100K 5%
U2A
C24
CC 25V 103M
C25
CE 25V 1.0uF 10%
R24
1/8W 1K 5%
R25
1/8W 100K 5%
C26
CC 25V 10pF 20%
U2B
TL072
R26
1/8W 100K 5%
C27
CE 25V 1.0uF 10%
R27
1/8W 2.2K 5%
P2
CONNECTOR COAX
R30
1/8W 5.6K 5%
C30
CE 25V 1.0uF 10%
R32
1/8W 5.6K 5%
C32
CM 25V 473K
R31
1/8W 5.6K 5%
C31
CM 25V 124K
R33
1/8W 100K 5%
U3A
C34
CC 25V 103M
C35
CE 25V 1.0uF 10%
R34
1/8W 1K 5%
R35
1/8W 100K 5%
C36
CC 25V 10pF 20%
U3B
TL072
R36
1/8W 100K 5%
C37
CE 25V 1.0uF 10%
R37
1/8W 2.2K 5%
P3
CONNECTOR COAX
R40
1/8W 1.5K 5%
C40
CE 25V 1.0uF 10%
C48
CM 25V 124K
C43
CM 25V 103K
C42
CM 25V 124K
R42
1/8W 3.3K 5%
C41
CM 25V 103K
R41
1/8W 5.6K 5%
R43
1/8W 100K 5%
U4A
C44
CC 25V 103M
C45
CE 25V 1.0uF 10%
R44
1/8W 1K 5%
R45
1/8W 100K 5%
C46
CC 25V 10pF 20%
U4B
TL072
R46
1/8W 100K 5%
C47
CE 25V 1.0uF 10%
R47
1/8W 2.2K 5%
P4
CONNECTOR COAX
P5
CONNECTOR COAX
P6
CONNECTOR COAX
P7
CONNECTOR COAX
P8
CONNECTOR COAX
P9
CONNECTOR COAX
C53
CM 25V 182K
R54
1/8W 10K 5%
C50
CE 25V 1.0uF 10%
R53
1/8W 100K 5%
U1B
TL072
C51
CE 25V 1.0uF 10%
R55
1/8W 33K 5%
C52
CM 25V 223J
R57
1/8W 5.6K 5%
R56
1/8W 3.3K 5%
P1
CONNECTOR COAX
P1A
CONNECTOR COAX
VR1
100KB
MIN
MAX
DIST
B TYPE VR
Resistor
Rotate
Resistor
R50
1/8W 10K 5%
VR2
10KA
HIGH
D20
1N4148
D21
1N4148
R51
1/8W 10K 5%
VR3
10KA
LOW
D30
1N4148
D31
1N4148
R52
1/8W 10K 5%
VR4
10KA
MID
D40
1N4148
D41
1N4148
A TYPE VR
Resistor
Rotate
R58
1/8W 22K 5%
VR5
47K A
WARM
NORMAL
TONE
VR6
47K A
LEVEL
Title
Size
B
Number
Revision
Date:
9-Apr-2009
Sheet of
File:
H:\preamp\BWMsd-03.ddb
Drawn By: