HIWATT

Late 70s Two-Input Preamp
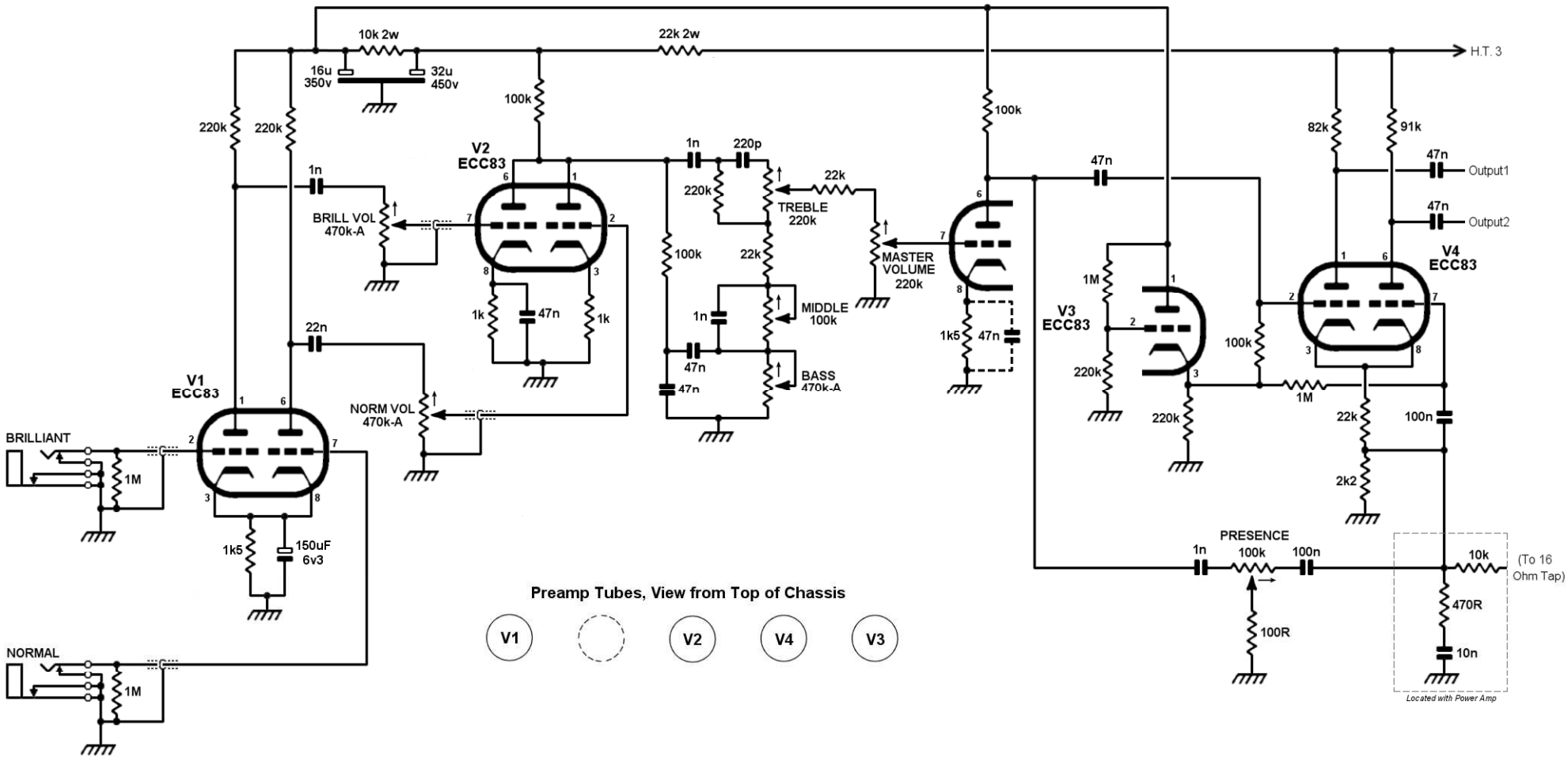
Drawing v 1.3 - Mark Huss